**Sales Code:** DFF325A

**Barcode:** 5056462677576

**Brand:** Hudson Reed

**Description:** Hudson Reed Fluted Satin Blue 600mm 2 Door Floor Standing Vanity Unit With Mid-Edge Basin



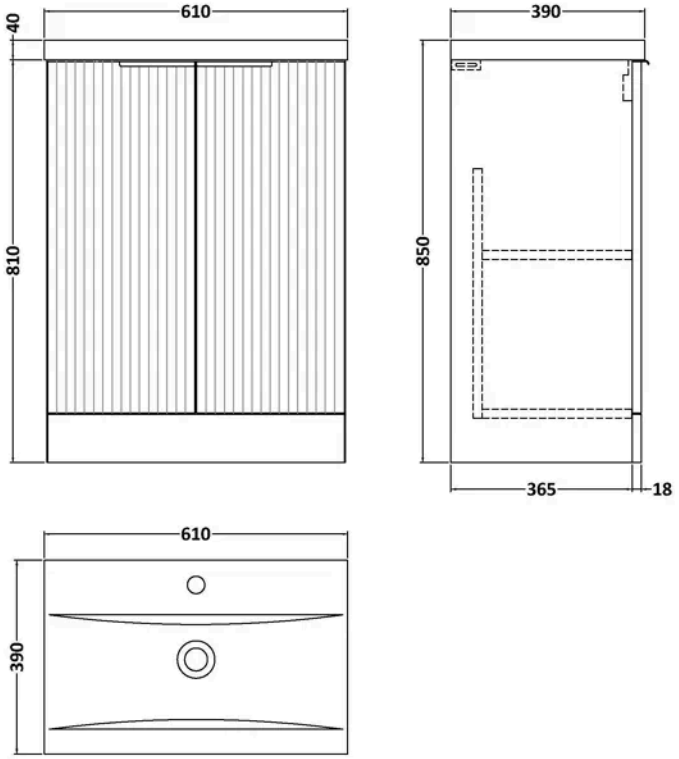


## Product Dimensions

| | |
|---|---|
| Product | 850 x 610 x 390mm (H x W x D) |
| Nett Weight | 35.7 kg |
| Packaged Weight | 36.2 kg |

## Packaging Details

| | |
|---|---|
| Box Qty | 2 |

## Product Details

| | |
|---|---|
| Country of Origin | China |
| Product Material | Mfc Painted Gloss |
| Colour/Finish | Satin Blue |
| Mount Type | Floor |
| Style | Contemporary |
| Handle Type | Finger Pull |
| Construction Method | Cam & Wood Dowel |
| Construction Type | Rigid |
| Fascia Finish | Mdf Painted Gloss |
| Fsc Certified | Yes |
| Handles Included | Yes |
| Inner Bowl Height | 125 mm |
| Leg Set Included | No |
| Material Thickness | 16 mm |
| No. Doors | 2 |
| No. Of Tapholes | 1 |
| No. Shelves | 1 |
| Number Of Bowls | 1 |
| Number Of Shelves | 1 |
| Overflow Included | Yes |
| Tap Included | No |
| Waste Included | No |

© ROXOR Group

**Sales Code:** FLU325 **Barcode:** 5056462654645 **Brand:** Hudson Reed **Description:** Hudson Reed Fluted 600mm Fluted 2-Door Floor Standing Vanity Unit



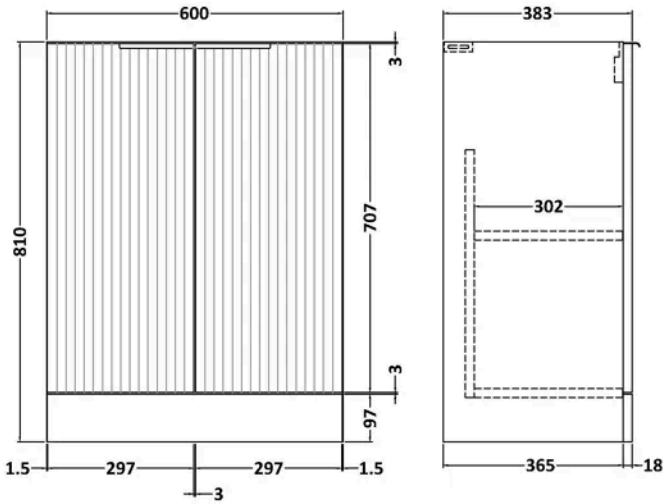


## Product Dimensions

| | |
|---|---|
| Product | 810 x 600 x 383mm (H x W x D) |
| Packaged | 830 x 620 x 405mm (H x W x D) |
| Nett Weight | 26.2 kg |
| Packaged Weight | 26.7 kg |

## Packaging Details

| | |
|---|---|
| Box Qty | 1 |

## Product Details

| | |
|---|---|
| Country of Origin | China |
| Product Material | Mdf Painted Matt |
| Colour/Finish | Azzure Blue |
| Mount Type | Floor |
| Style | Contemporary |
| Construction Method | Cam & Wood Dowel |
| Construction Type | Rigid |
| Fascia Finish | Mdf Painted Matt |
| Handles Included | Yes |
| Material Thickness | 18 mm |
| No. Doors | 2 |

© ROXOR Group

**Sales Code:** NVM013 **Barcode:** 5055369043415 **Brand:** nuie **Description:** 1 Tap Hole 600mm Mid-Edge Ceramic Basin



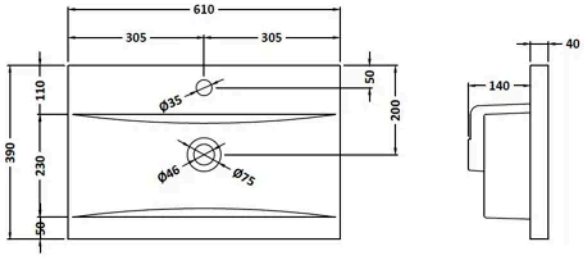


## Product Dimensions

| | |
|---|---|
| Product | 180 x 610 x 390mm (H x W x D) |
| Packaged | 195 x 410 x 630mm (H x W x D) |
| Nett Weight | 10 kg |
| Packaged Weight | 11.2 kg |

## Packaging Details

| | |
|---|---|
| Box Qty | 1 |

## Product Details

| | |
|---|---|
| Country of Origin | China |
| Product Material | Vitreous China |
| Colour/Finish | White |
| Style | Contemporary |
| Ce Certified | Yes |
| Inner Bowl Height | 125 mm |
| No. Of Tapholes | 1 |
| Number Of Bowls | 1 |
| Overflow Included | Yes |
| Tap Included | No |
| Waste Included | No |

© ROXOR Group