Sales Code: DFF294LCM-S

Barcode: 5064007071000

Brand: Hudson Reed

Description: Hudson Reed Fluted Satin Grey 600mm 1 Drawer Wall Hung Vanity Unit With Carrara Laminate Worktop and Shelf



Technical Drawing Not Available

Product Dimensions

Product	381 x 605 x 390mm (H x W x D)
Nett Weight	14.5 kg
Packaged Weight	15 kg

Product Details

Country of Origin	China
Product Material	Mfc Painted Gloss
Colour/Finish	Satin Grey
Mount Type	Wall Hung
Style	Contemporary
Handle Type	Finger Pull
Construction Method	Cam & Wood Dowel
Construction Type	Rigid
Drawer Type	80mm High Metal S/C Inc Gallery
Fascia Finish	Mfc Painted Gloss
Fsc Certified	Yes
Handles Included	Yes
Material Thickness	16 mm
No. Drawers	1
No. Shelves	1
Number Of Shelves	1
Waste Shroud	Yes

© ROXOR Group

Sales Code: 154048SB **Barcode:** 5056462654942 **Brand:** nuie **Description:** Dark Grey Shelf Support Brackets



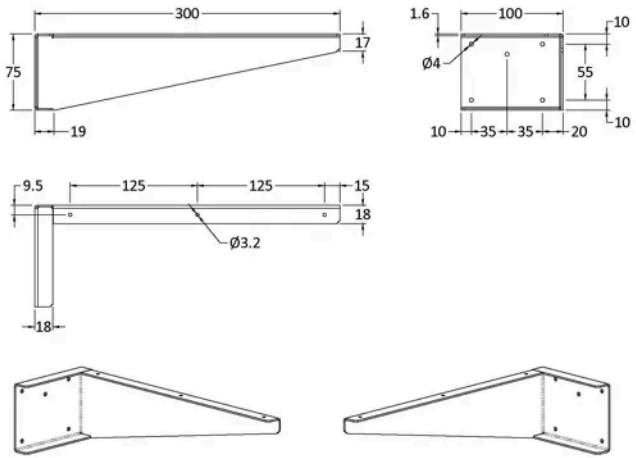

Product Dimensions

Product	300 x 100 x 50mm (H x W x D)
Packaged	90 x 130 x 330mm (H x W x D)
Nett Weight	0.72 kg
Packaged Weight	0.72 kg

Product Details

Country of Origin	China
Product Material	Stainless Steel
Colour/Finish	Dark Grey
Style	Contemporary

© ROXOR Group

Sales Code: FLU294 **Barcode:** 5056462654676 **Brand:** Hudson Reed **Description:** Hudson Reed Fluted 600mm Fluted Single Drawer Vanity Unit

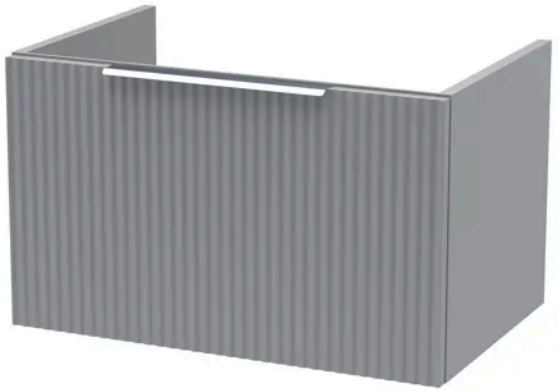

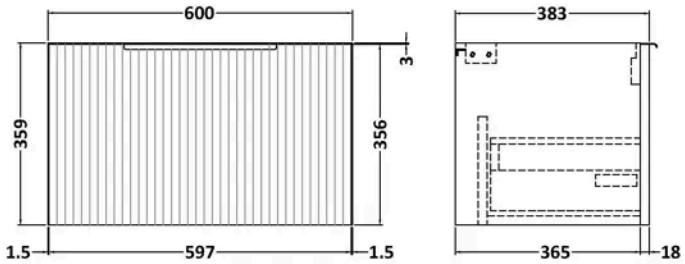

Product Dimensions

Product	359 x 600 x 383mm (H x W x D)
Packaged	380 x 620 x 405mm (H x W x D)
Nett Weight	13 kg
Packaged Weight	13.5 kg

Packaging Details

Box Qty	1

Product Details

Country of Origin	China
Product Material	Mdf Painted Matt
Colour/Finish	Satin Grey
Mount Type	Wall Hung
Style	Contemporary
Construction Method	Cam & Wood Dowel
Construction Type	Rigid
Fascia Finish	Mdf Painted Matt
Handles Included	Yes
Material Thickness	18 mm
No. Drawers	1

© ROXOR Group

Sales Code: LCM600 **Barcode:** 5056462624433 **Brand:** nuie **Description:** 605 x 390mm Carrera Marble Laminate Worktop

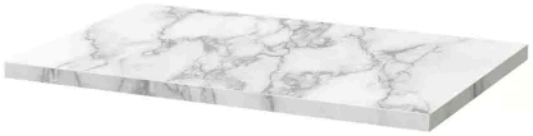

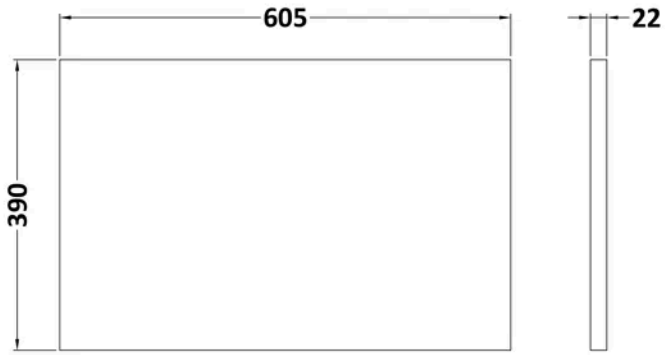

Product Dimensions

Product	22 x 605 x 390mm (H x W x D)
Packaged	25 x 610 x 455mm (H x W x D)
Nett Weight	2 kg
Packaged Weight	2 kg

Packaging Details

Box Qty	1

Product Details

Country of Origin	United Kingdom
Product Material	Mfc Laminated
Colour/Finish	Carrera Marble
Style	Contemporary

© ROXOR Group

Sales Code: MWT260 **Barcode:** 5056211899747 **Brand:** nuie **Description:** 600mm Satin Grey MDF Matt Furniture Worktop



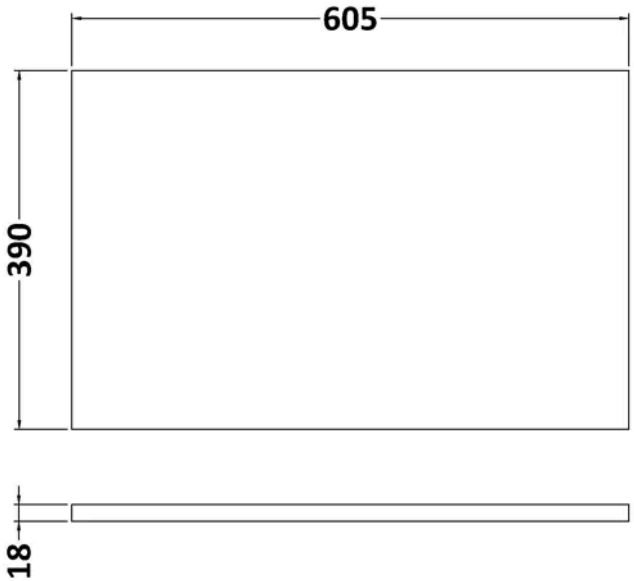

Product Dimensions

Product	18 x 605 x 390mm (H x W x D)
Packaged	25 x 625 x 410mm (H x W x D)
Nett Weight	2 kg
Packaged Weight	2.5 kg

Packaging Details

Box Qty	1

Product Details

Country of Origin	China
Product Material	Mdf Painted Matt
Colour/Finish	Satin Grey
Style	Contemporary

© ROXOR Group