**Sales Code:** DFF194F

**Barcode:** 5056462679068

**Brand:** Hudson Reed

**Description:** Hudson Reed Fluted Satin White 1200mm 2 Drawer Wall Hung Vanity Unit With 2 Tap Hole Ceramic Basin



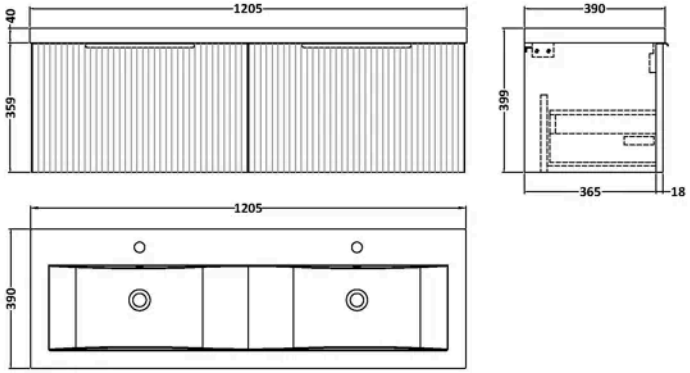


## Product Dimensions

| | |
|---|---|
| Product | 399 x 1205 x 383mm (H x W x D) |
| Nett Weight | 43.62 kg |
| Packaged Weight | 44.12 kg |

## Packaging Details

| | |
|---|---|
| Box Qty | 3 |

## Product Details

| | |
|---|---|
| Country of Origin | China |
| Product Material | Mfc Painted Gloss |
| Colour/Finish | Satin White |
| Mount Type | Wall Hung |
| Style | Contemporary |
| Handle Type | Finger Pull |
| Construction Method | Cam & Wood Dowel |
| Construction Type | Rigid |
| Drawer Type | 80mm High Metal S/C Inc Gallery |
| Fascia Finish | Mdf Painted Gloss |
| Fsc Certified | Yes |
| Handles Included | Yes |
| Inner Bowl Height | 103 mm |
| Leg Set Included | No |
| Material Thickness | 16 mm |
| No. Drawers | 2 |
| No. Of Tapholes | 2 |
| Number Of Bowls | 2 |
| Overflow Included | Yes |
| Tap Included | No |
| Waste Included | No |
| Waste Shroud | Yes |

© ROXOR Group

**Sales Code:** CBM424 **Barcode:** 5056211875826 **Brand:** nuie **Description:** 2 Tap Hole 1200mm Ceramic Mid-Edge Twin Basin



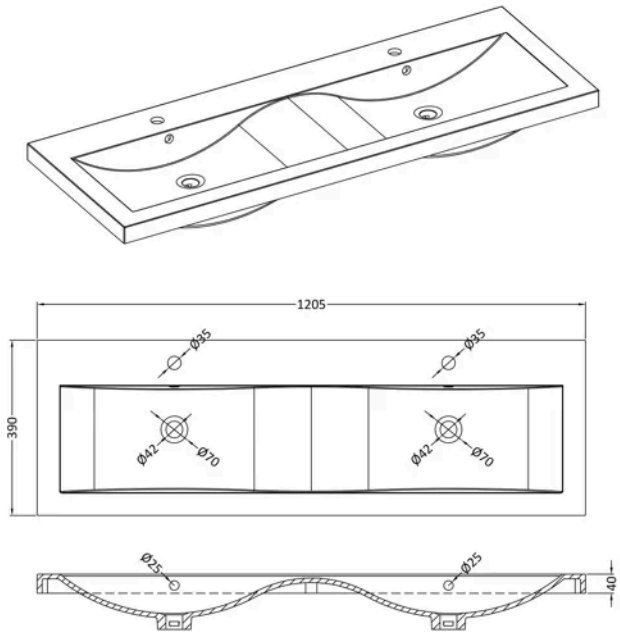


## Product Dimensions

| | |
|---|---|
| Product | 390 x 1205 x 175mm (H x W x D) |
| Packaged | 100 x 1205 x 400mm (H x W x D) |
| Nett Weight | 18.12 kg |
| Packaged Weight | 18.12 kg |

## Packaging Details

| | |
|---|---|
| Box Qty | 1 |

## Product Details

| | |
|---|---|
| Country of Origin | China |
| Product Material | Vitreous China |
| Colour/Finish | White |
| Style | Contemporary |
| Ce Certified | Yes |
| Inner Bowl Height | 103 mm |
| No. Of Tapholes | 2 |
| Number Of Bowls | 2 |
| Overflow Included | Yes |
| Tap Included | No |
| Waste Included | No |

© ROXOR Group

**Sales Code:** FLU194 **Barcode:** 5056462654669 **Brand:** Hudson Reed **Description:** Hudson Reed Fluted 600mm Fluted Single Drawer Vanity Unit



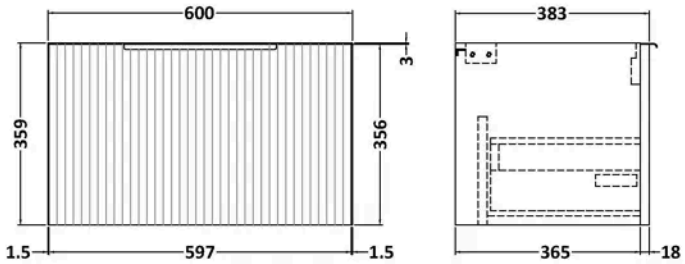


## Product Dimensions

| | |
|---|---|
| Product | 359 x 600 x 383mm (H x W x D) |
| Packaged | 380 x 620 x 405mm (H x W x D) |
| Nett Weight | 13 kg |
| Packaged Weight | 13.5 kg |

## Packaging Details

| | |
|---|---|
| Box Qty | 1 |

## Product Details

| | |
|---|---|
| Country of Origin | China |
| Product Material | Mdf Painted Matt |
| Colour/Finish | Gloss White |
| Mount Type | Wall Hung |
| Style | Contemporary |
| Construction Method | Cam & Wood Dowel |
| Construction Type | Rigid |
| Fascia Finish | Mdf Painted Matt |
| Handles Included | Yes |
| Material Thickness | 18 mm |
| No. Drawers | 1 |

© ROXOR Group