Sales Code: DFF191A

Barcode: 5056462677217

Brand: Hudson Reed

Description: Hudson Reed Fluted Satin White 500mm 1 Drawer Wall Hung Vanity Unit With Mid-Edge Basin



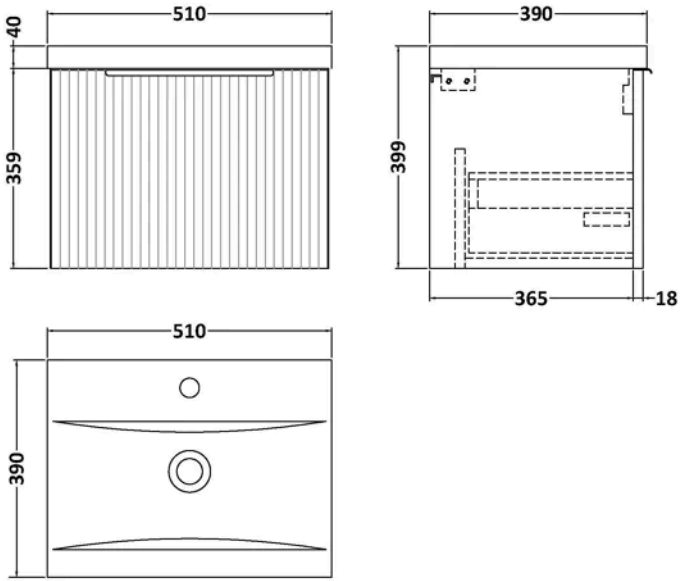

Product Dimensions

Product	399 x 510 x 390mm (H x W x D)
Nett Weight	21.5 kg
Packaged Weight	22 kg

Packaging Details

Box Qty	2

Product Details

Country of Origin	China
Product Material	Mfc Painted Gloss
Colour/Finish	Satin White
Mount Type	Wall Hung
Style	Contemporary
Handle Type	Finger Pull
Construction Method	Cam & Wood Dowel
Construction Type	Rigid
Drawer Type	80mm High Metal S/C Inc Gallery
Fascia Finish	Mdf Painted Gloss
Fsc Certified	Yes
Handles Included	Yes
Inner Bowl Height	125 mm
Leg Set Included	No
Material Thickness	16 mm
No. Drawers	1
No. Of Tapholes	1
Number Of Bowls	1
Overflow Included	Yes
Tap Included	No
Waste Included	No
Waste Shroud	Yes

© ROXOR Group

Sales Code: FLU191 **Barcode:** 5056462654546 **Brand:** Hudson Reed **Description:** Hudson Reed Fluted 500mm Fluted Single Drawer Vanity Unit

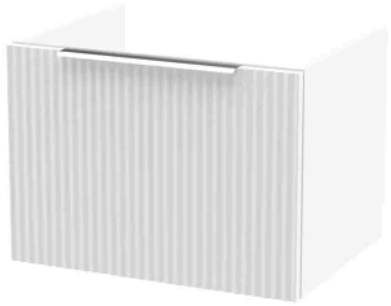

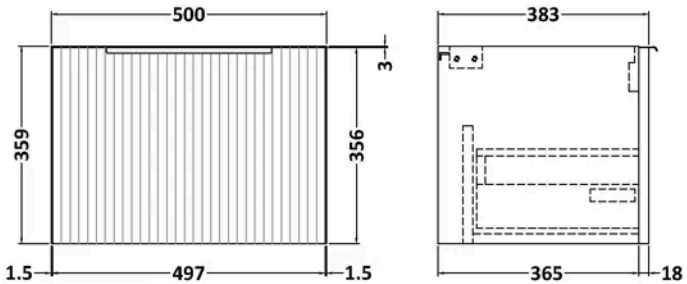

Product Dimensions

Product	359 x 500 x 383mm (H x W x D)
Packaged	380 x 520 x 405mm (H x W x D)
Nett Weight	12 kg
Packaged Weight	12.5 kg

Packaging Details

Box Qty	1

Product Details

Country of Origin	China
Product Material	Mdf Painted Matt
Colour/Finish	Gloss White
Mount Type	Wall Hung
Style	Contemporary
Construction Method	Cam & Wood Dowel
Construction Type	Rigid
Fascia Finish	Mdf Painted Matt
Handles Included	Yes
Material Thickness	18 mm
No. Drawers	1

© ROXOR Group

Sales Code: NVM012 **Barcode:** 5055369043446 **Brand:** nuie **Description:** 1 Tap Hole 500mm Mid-Edge Ceramic Basin



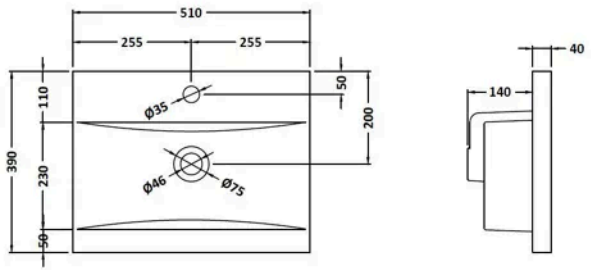

Product Dimensions

Product	180 x 510 x 390mm (H x W x D)
Packaged	400 x 530 x 200mm (H x W x D)
Nett Weight	10 kg
Packaged Weight	10 kg

Packaging Details

Box Qty	1

Product Details

Country of Origin	China
Product Material	Vitreous China
Colour/Finish	White
Style	Contemporary
Ce Certified	Yes
Inner Bowl Height	125 mm
No. Of Tapholes	1
Number Of Bowls	1
Overflow Included	Yes
Tap Included	No
Waste Included	No

© ROXOR Group