Sales Code: DFF125D

Barcode: 5056462677538

Brand: Hudson Reed

Description: Hudson Reed Fluted Satin White 600mm 2 Door Floor Standing Vanity Unit With Thin Edge Basin



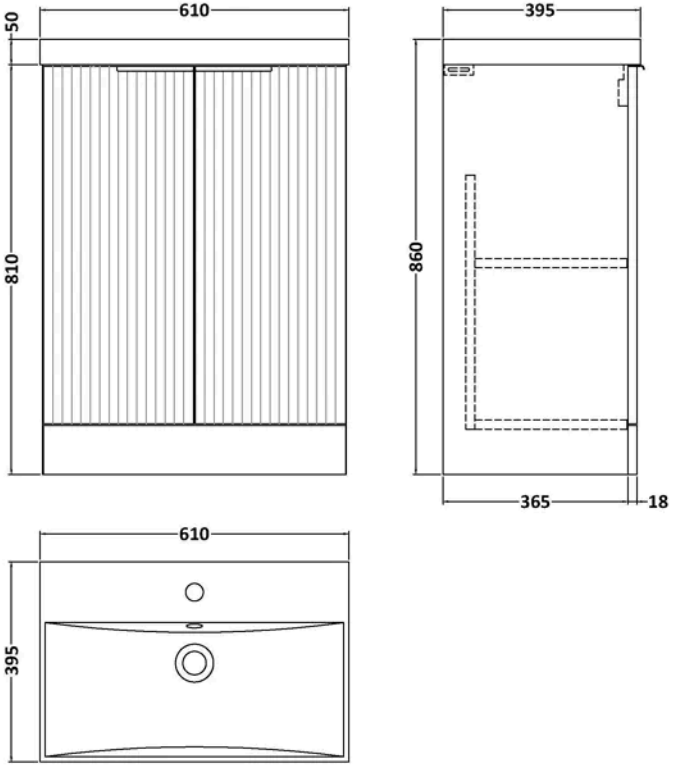

Product Dimensions

Product	860 x 610 x 395mm (H x W x D)
Nett Weight	36.7 kg
Packaged Weight	37.2 kg

Packaging Details

Box Qty	2

Product Details

Country of Origin	China
Product Material	Mfc Painted Gloss
Colour/Finish	Satin White
Mount Type	Floor
Style	Contemporary
Handle Type	Finger Pull
Construction Method	Cam & Wood Dowel
Construction Type	Rigid
Fascia Finish	Mdf Painted Gloss
Fsc Certified	Yes
Handles Included	Yes
Inner Bowl Height	125 mm
Leg Set Included	No
Material Thickness	16 mm
No. Doors	2
No. Of Tapholes	1
No. Shelves	1
Number Of Bowls	1
Number Of Shelves	1
Overflow Included	Yes
Tap Included	No
Waste Included	No

© ROXOR Group

Sales Code: FLU125 **Barcode:** 5056462654621 **Brand:** Hudson Reed **Description:** Hudson Reed Fluted 600mm Fluted 2-Door Floor Standing Vanity Unit



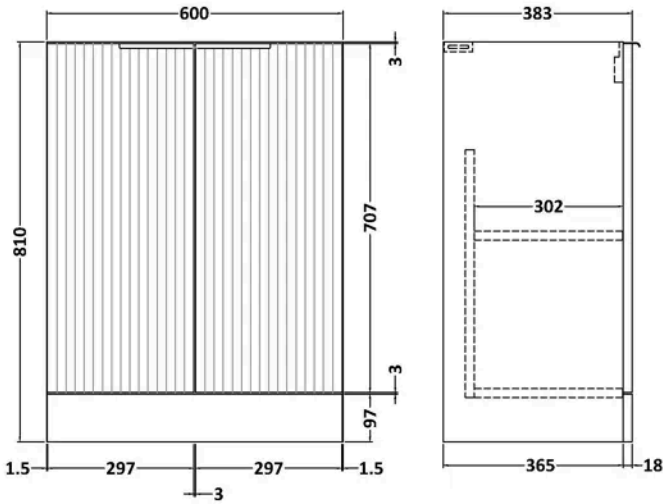

Product Dimensions

Product	810 x 600 x 383mm (H x W x D)
Packaged	830 x 620 x 405mm (H x W x D)
Nett Weight	26.2 kg
Packaged Weight	26.7 kg

Packaging Details

Box Qty	1

Product Details

Country of Origin	China
Product Material	Mdf Painted Matt
Colour/Finish	Gloss White
Mount Type	Floor
Style	Contemporary
Construction Method	Cam & Wood Dowel
Construction Type	Rigid
Fascia Finish	Mdf Painted Matt
Handles Included	Yes
Material Thickness	18 mm
No. Doors	2

© ROXOR Group

Sales Code: NVM033 **Barcode:** 5056211853428 **Brand:** nuie **Description:** 1 Tap Hole 600mm Thin Edge Ceramic Basin



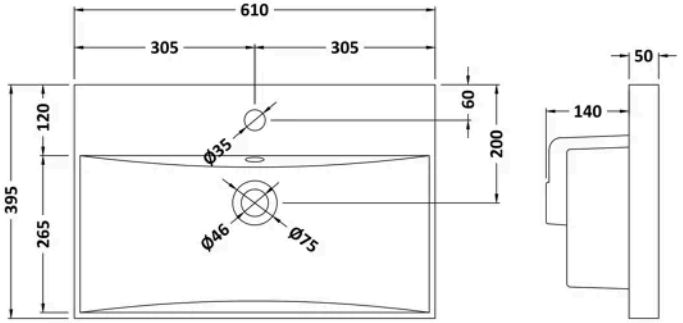

Product Dimensions

Product	190 x 610 x 395mm (H x W x D)
Packaged	190 x 630 x 415mm (H x W x D)
Nett Weight	11 kg
Packaged Weight	11.5 kg

Packaging Details

Box Qty	1

Product Details

Country of Origin	China
Product Material	Vitreous China
Colour/Finish	White
Style	Contemporary
Ce Certified	Yes
Inner Bowl Height	125 mm
No. Of Tapholes	1
Number Of Bowls	1
Overflow Included	Yes
Tap Included	No
Waste Included	No

© ROXOR Group