Sales Code: CUR841 **Barcode:** 5056462659862 **Brand:** Hudson Reed **Description:** Hudson Reed Solar Fern Green 600mm Floor Standing WC Unit



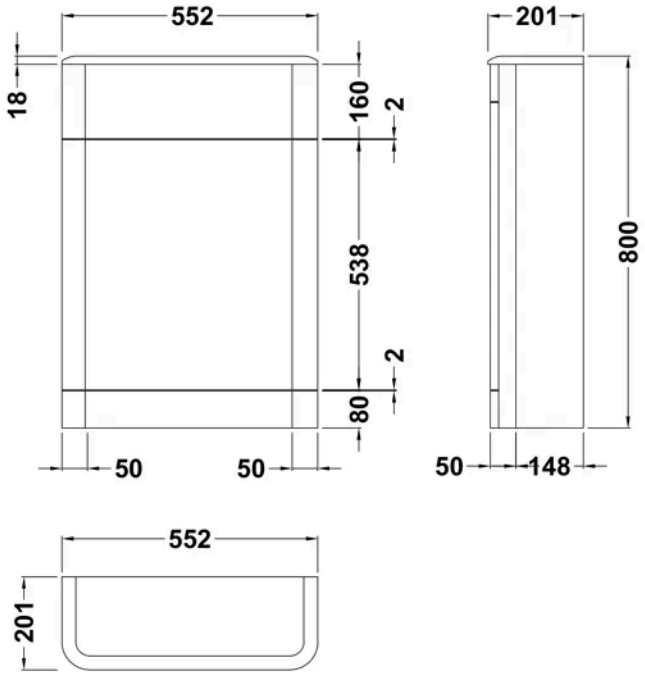

Product Dimensions

Product	800 x 550 x 200mm (H x W x D)
Packaged	910 x 620 x 260mm (H x W x D)
Nett Weight	36.17 kg
Packaged Weight	36.67 kg

Packaging Details

Box Qty	1

Product Details

Country of Origin	Republic of Ireland
Product Material	Mdf Vinyl Smooth Matt
Colour/Finish	Fern Green
Mount Type	Floor
Style	Contemporary
Construction Method	Cam & Wood Dowel
Construction Type	Rigid
Fascia Finish	Mdf Vinyl Smooth Matt
Fsc Certified	Yes
Material Thickness	18 mm

© ROXOR Group