**Sales Code:** CUR835 **Barcode:** 5056462659824 **Brand:** Hudson Reed **Description:** Hudson Reed 800mm Fern Green 2 Drawer Floor Standing Vanity Unit



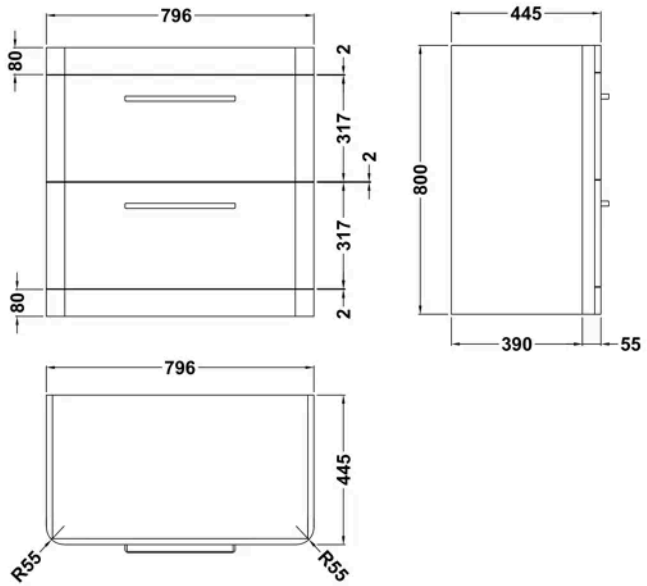


## Product Dimensions

| | |
|---|---|
| Product | 800 x 796 x 445mm (H x W x D) |
| Packaged | 870 x 870 x 510mm (H x W x D) |
| Nett Weight | 36 kg |
| Packaged Weight | 38 kg |

## Packaging Details

| | |
|---|---|
| Box Qty | 1 |

## Product Details

| | |
|---|---|
| Country of Origin | Republic of Ireland |
| Product Material | Mdf Vinyl Smooth Matt |
| Colour/Finish | Fern Green |
| Mount Type | Floor |
| Style | Contemporary |
| Handle Type | D Shape |
| Construction Method | Cam & Wood Dowel |
| Construction Type | Rigid |
| Fascia Finish | Mdf Vinyl Smooth Matt |
| Fsc Certified | Yes |
| Handles Included | Yes |
| Leg Set Included | No |
| Material Thickness | 18 mm |
| No. Drawers | 2 |

© ROXOR Group