Sales Code: CUR193 **Barcode:** 5056211817840 **Brand:** Hudson Reed **Description:** Hudson Reed 600mm 2 Drawer Wall Hung Vanity Unit



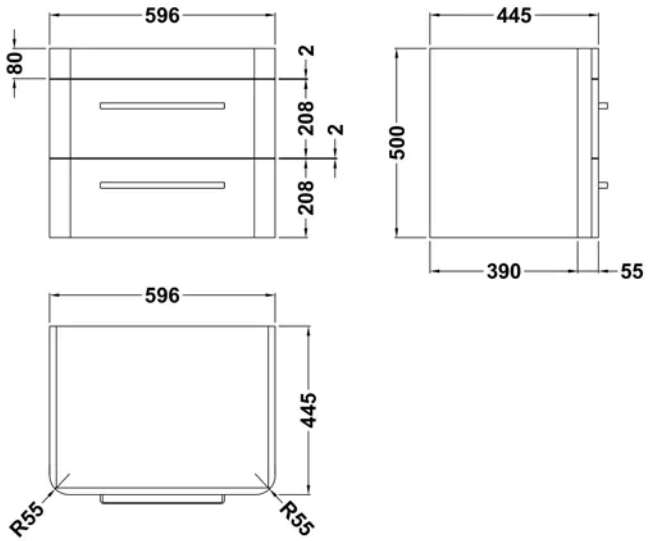

Product Dimensions

Product	500 x 596 x 445mm (H x W x D)
Packaged	570 x 670 x 510mm (H x W x D)
Nett Weight	20.5 kg
Packaged Weight	22.5 kg

Packaging Details

Box Qty	1

Product Details

Country of Origin	Republic of Ireland
Product Material	Mdf Vinyl Smooth Matt
Colour/Finish	Pure White
Mount Type	Wall Hung
Style	Contemporary
Handle Type	D Shape
Construction Method	Cam & Wood Dowel
Construction Type	Rigid
Drawer Type	80mm High Metal S/C Inc Gallery
Fascia Finish	Mdf Vinyl Smooth Matt
Fsc Certified	Yes
Handles Included	Yes
Leg Set Included	No
Material Thickness	18 mm
No. Drawers	2

© ROXOR Group