Sales Code: CTB031BN **Barcode:** 5056462641928 **Brand:** BC Designs **Description:** BC Sanitan Brushed Nickel 3 Tap Hole Wall Mount Lever Basin Filler



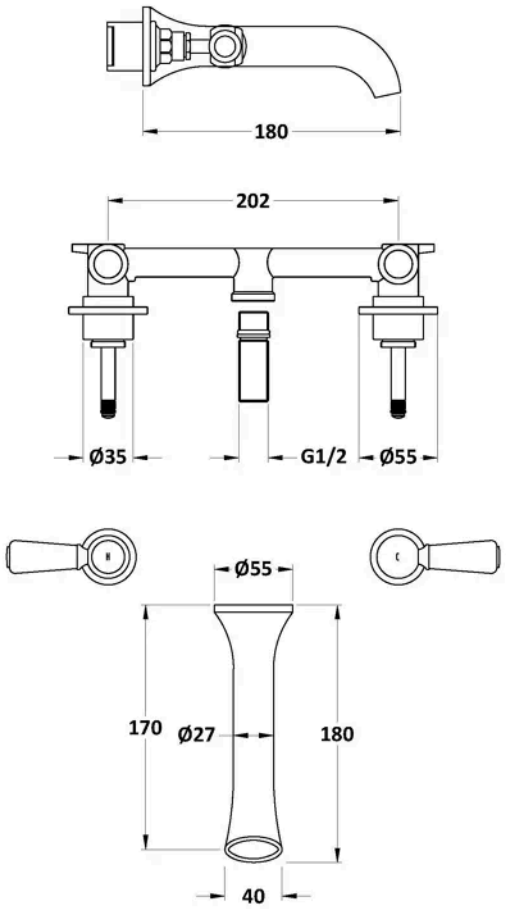

Product Dimensions

Product	55 x 180mm (H x D)
Packaged	65 x 350 x 213mm (H x W x D)
Nett Weight	1.7 kg
Packaged Weight	2 kg

Packaging Details

Label Size (mm)	50 x 100
Label Colour	White
Label Qty	1.0000

Product Details

Country of Origin	China
Product Material	Brass
Control Type	Manual
WRAS Approved	No
Valve/Cartridge Type	1/4 Turn Ceramic Disc
Colour/Finish	Brushed Nickel
Mount Type	Wall Hung
Style	Traditional
Handle Type	Lever
TMV2 Approved	No
TMV3 Approved	No
Min Operating Pressure	0.1 Bar
Tap Spout Projection	180 mm
Valve / Cartridge Type	1/4 Turn Ceramic Disc
Waste Included	No

© ROXOR Group