Sales Code: CTA015BC

Barcode: 5056462640730

Brand: BC Designs

Description: BC Sanitan Brushed Chrome Deck Mounted Crosshead Mono Basin Mixer Tap With Pop Up Waste



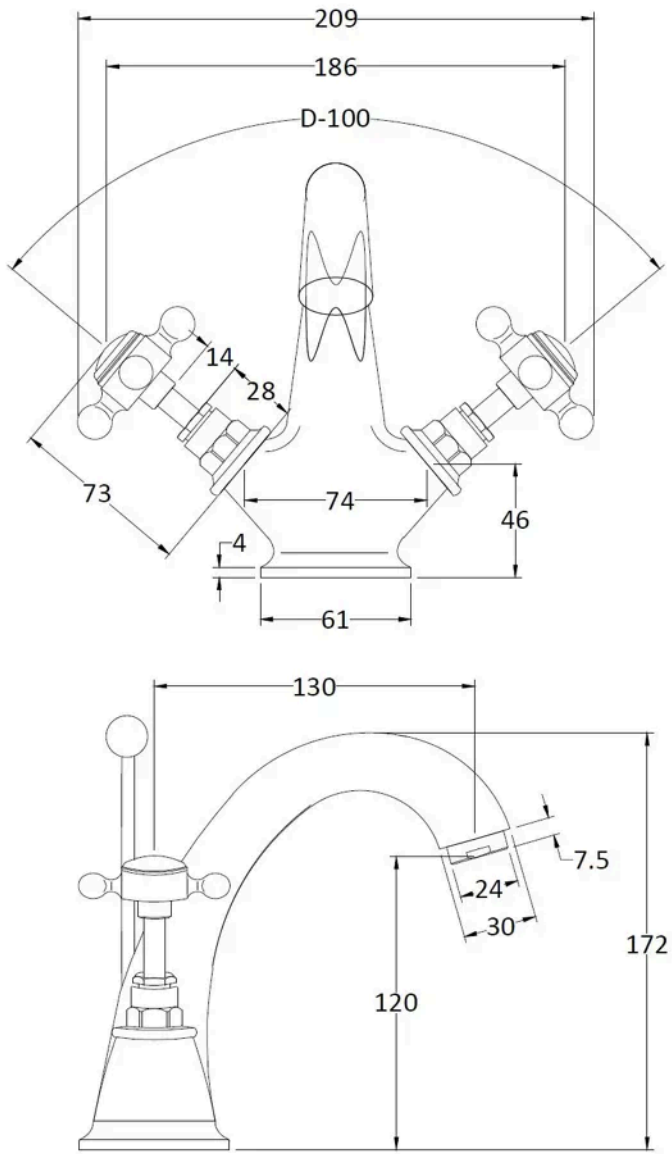

Product Dimensions

Product	172 x 215 x 185mm (H x W x D)
Packaged	125 x 220 x 390mm (H x W x D)
Outer Box	395 x 415 x 440mm (H x W x D)
Nett Weight	2.2 kg
Packaged Weight	2.4 kg

Packaging Details

Label Size (mm)	50 x 100
Label Colour	White
Label Qty	1.0000

Product Details

Country of Origin	China
Product Material	Brass
Control Type	Manual
Waste Type	Pop-Up
WRAS Approved	No
Valve/Cartridge Type	1/4 Turn Ceramic Disc
Colour/Finish	Brushed Chrome
Mount Type	Deck
Style	Traditional
Handle Type	Crosshead
TMV2 Approved	No
TMV3 Approved	No
Min Operating Pressure	0.1 Bar
Tap Spout Height	120 mm
Tap Spout Projection	130 mm
Tap Tails Included	Yes
Valve / Cartridge Type	1/4 Turn Ceramic Disc
Waste Included	Yes

© ROXOR Group