Sales Code: CSF894WS1

Barcode: 5056817712914

Brand: BC Designs

Description: BC Designs Crestfield 600mm Forest Green 1 Drawer Wall Hung Vanity Unit With Marble Basin



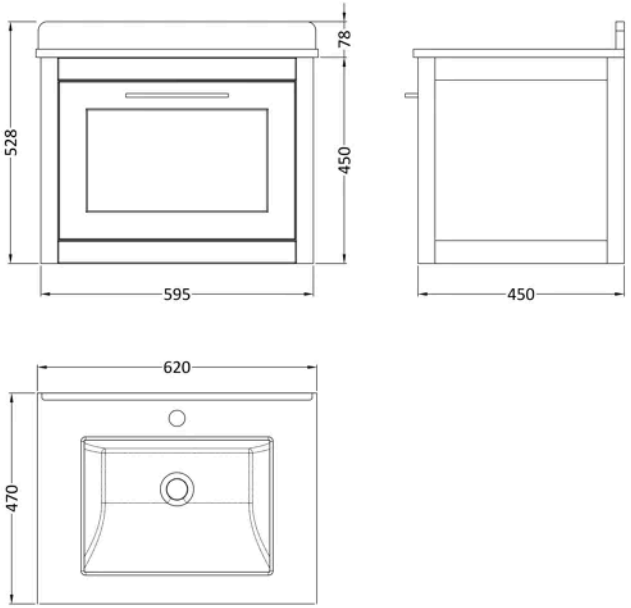

Product Dimensions

Product	528 x 620 x 470mm (H x W x D)
Packaged	465 x 620 x 475mm (H x W x D)
Nett Weight	37.5 kg
Packaged Weight	37.5 kg

Product Details

Country of Origin	China
Product Material	Mdf Vinyl Smooth Matt,Natural Marble,Vitreous China
Colour/Finish	Forest Green
Mount Type	Wall Hung
Style	Traditional
Handle Type	D Shape
Construction Method	Cam & Wood Dowel
Construction Type	Rigid
Drawer Type	80mm High Metal S/C Inc Gallery
Fascia Finish	Mdf Vinyl Smooth Matt
Fsc Certified	Yes
Handles Included	Yes
Inner Bowl Depth	260 mm
Inner Bowl Height	160 mm
Inner Bowl Width	390 mm
Leg Set Included	No
Material Thickness	18 mm
No. Drawers	1
No. Of Tapholes	1
Number Of Bowls	1
Overflow Cover Included	Yes
Overflow Included	Yes
Tap Included	No
Waste Included	No
Waste Shroud	Yes

© ROXOR Group

Sales Code: CRE894 **Barcode:** 5056678463123 **Brand:** BC Designs **Description:** BC Designs Crestfield 600mm Forest Green Wall Hung Vanity Unit



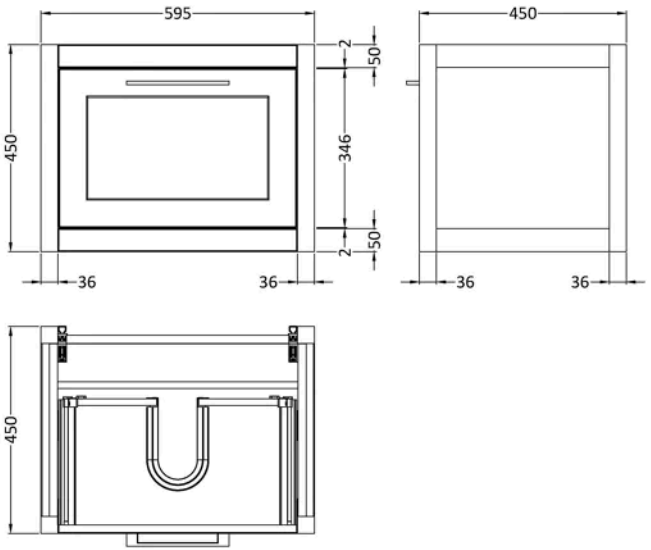

Product Dimensions

Product	450 x 595 x 450mm (H x W x D)
Packaged	470 x 615 x 470mm (H x W x D)
Nett Weight	20 kg
Packaged Weight	20.5 kg

Product Details

Country of Origin	China
Product Material	Mdf Vinyl Smooth Matt
Colour/Finish	Forest Green
Mount Type	Wall Hung
Style	Traditional
Construction Method	Cam & Wood Dowel
Construction Type	Rigid
Drawer Type	80mm High Metal S/C Inc Gallery
Fascia Finish	Mdf Vinyl Smooth Matt
Fsc Certified	Yes
Handles Included	Yes
Material Thickness	18 mm
No. Drawers	1

© ROXOR Group

Sales Code: MFB222 **Barcode:** 5056678471210 **Brand:** BC Designs **Description:** BC Designs 600mm 1 Tap Hole White Single Square Bowl Marble Worktop Basin



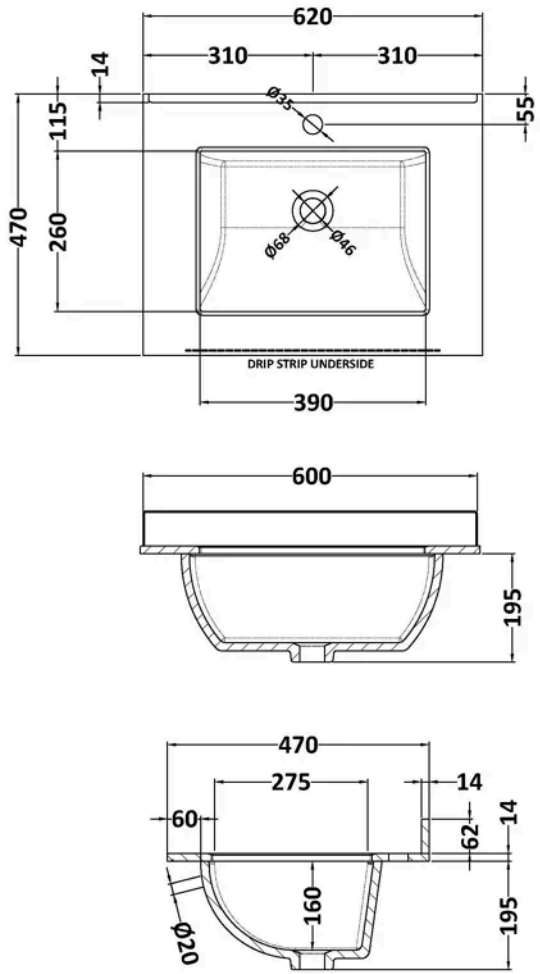

Product Dimensions

Product	209 x 620 x 470mm (H x W x D)
Packaged	250 x 700 x 580mm (H x W x D)
Nett Weight	16.5 kg
Packaged Weight	17 kg

Packaging Details

Label Size (mm)	50 x 100
Label Colour	White
Label Qty	2.0000

Product Details

Country of Origin	China
Product Material	Vitreous China
Colour/Finish	White
Style	Traditional
Bottle Trap Included	No
Ce Certified	Yes
Inner Bowl Depth	275 mm
Inner Bowl Height	160 mm
Inner Bowl Width	390 mm
No. Of Tapholes	1
Number Of Bowls	1
Overflow Cover Included	No
Overflow Included	Yes
Tap Included	No
Waste Included	No

© ROXOR Group