**Sales Code:** CSF894WMT

**Barcode:** 5056817712921

**Brand:** BC Designs

**Description:** BC Designs Crestfield 600mm Forest Green 1 Drawer Wall Hung Vanity Unit With White Marble Worktop



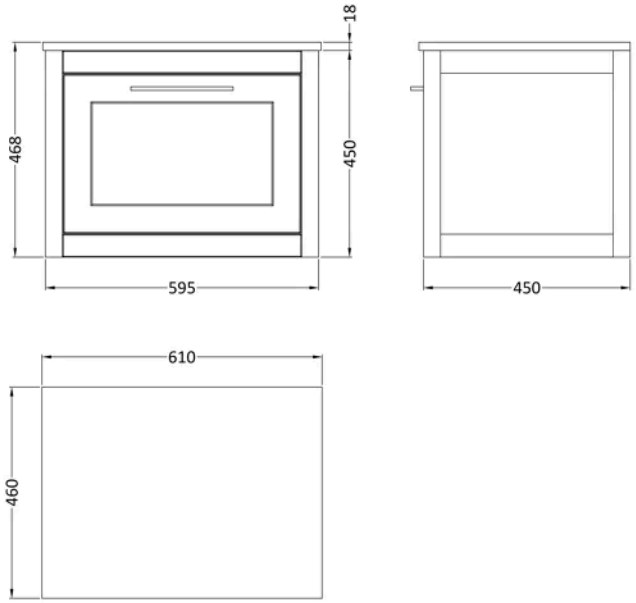


## Product Dimensions

| | |
|---|---|
| Product | 468 x 610 x 460mm (H x W x D) |
| Packaged | 465 x 620 x 475mm (H x W x D) |
| Nett Weight | 34.5 kg |
| Packaged Weight | 34.5 kg |

## Product Details

| | |
|---|---|
| Country of Origin | China |
| Product Material | Mdf Vinyl Smooth Matt,Natural Marble |
| Colour/Finish | Forest Green |
| Mount Type | Wall Hung |
| Style | Traditional |
| Handle Type | D Shape |
| Construction Method | Cam & Wood Dowel |
| Construction Type | Rigid |
| Drawer Type | 80mm High Metal S/C Inc Gallery |
| Fascia Finish | Mdf Vinyl Smooth Matt |
| Fsc Certified | Yes |
| Handles Included | Yes |
| Material Thickness | 18 mm |
| No. Drawers | 1 |
| Waste Shroud | Yes |

© ROXOR Group

**Sales Code:** CRE894 **Barcode:** 5056678463123 **Brand:** BC Designs **Description:** BC Designs Crestfield 600mm Forest Green Wall Hung Vanity Unit



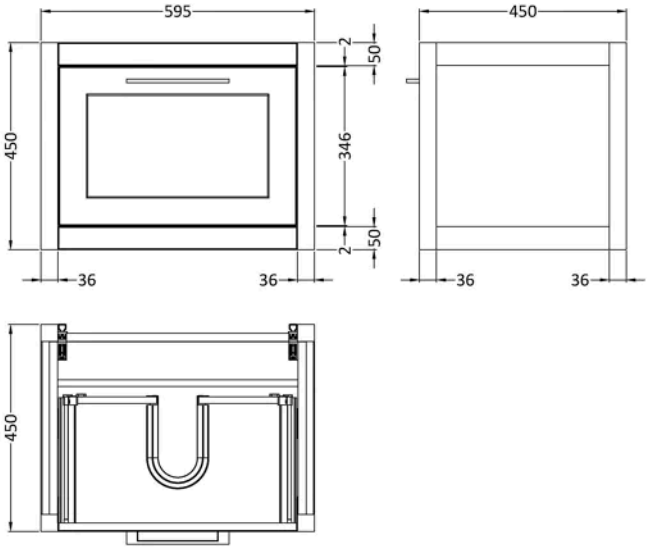


## Product Dimensions

| | |
|---|---|
| Product | 450 x 595 x 450mm (H x W x D) |
| Packaged | 470 x 615 x 470mm (H x W x D) |
| Nett Weight | 20 kg |
| Packaged Weight | 20.5 kg |

## Packaging Details

| | |
|---|---|
| Box Qty | 1 |

## Product Details

| | |
|---|---|
| Country of Origin | China |
| Product Material | Mdf Vinyl Smooth Matt |
| Colour/Finish | Forest Green |
| Mount Type | Wall Hung |
| Style | Traditional |
| Construction Method | Cam & Wood Dowel |
| Construction Type | Rigid |
| Drawer Type | 80mm High Metal S/C Inc Gallery |
| Fascia Finish | Mdf Vinyl Smooth Matt |
| Fsc Certified | Yes |
| Handles Included | Yes |
| Material Thickness | 18 mm |
| No. Drawers | 1 |

© ROXOR Group

**Sales Code:** MFBT16046 **Barcode:** 5056678473764 **Brand:** BC Designs **Description:** BC Designs 610 x 460mm White Marble Top



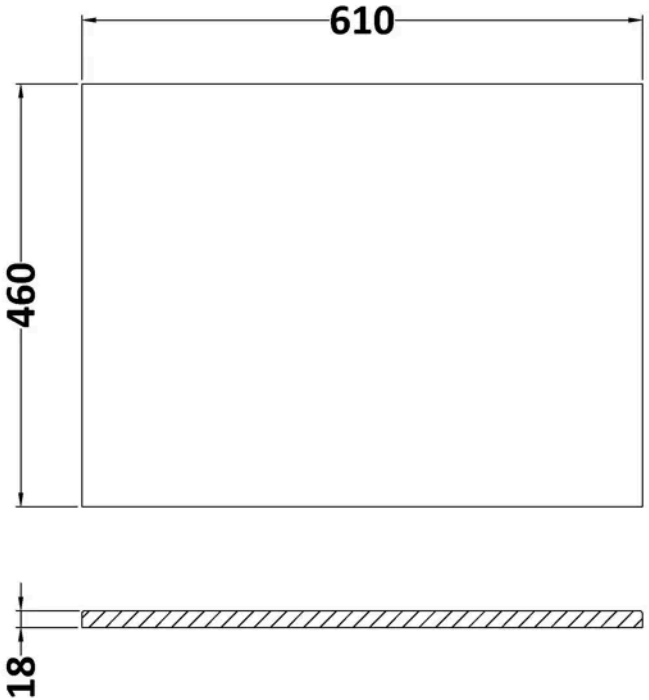


## Product Dimensions

| | |
|---|---|
| Product | 18 x 610 x 460mm (H x W x D) |
| Packaged | 35 x 650 x 500mm (H x W x D) |
| Nett Weight | 13.5 kg |
| Packaged Weight | 14 kg |

## Packaging Details

| | |
|---|---|
| Box Qty | 1 |
| Label Size (mm) | 50 x 100 |
| Label Colour | White |
| Label Qty | 1.0000 |

## Product Details

| | |
|---|---|
| Country of Origin | China |
| Product Material | Natural Marble |
| Colour/Finish | White |
| Style | Contemporary |
| Fixings Included | No |
| Fsc Certified | Yes |
| Material Thickness | 18 mm |

© ROXOR Group