Sales Code: CSF296A

Barcode: 5056817713065

Brand: BC Designs

Description: BC Designs Crestfield 800mm Earls Grey 1 Drawer Wall Hung Vanity Unit With 1 Tap Hole Fireclay Basin



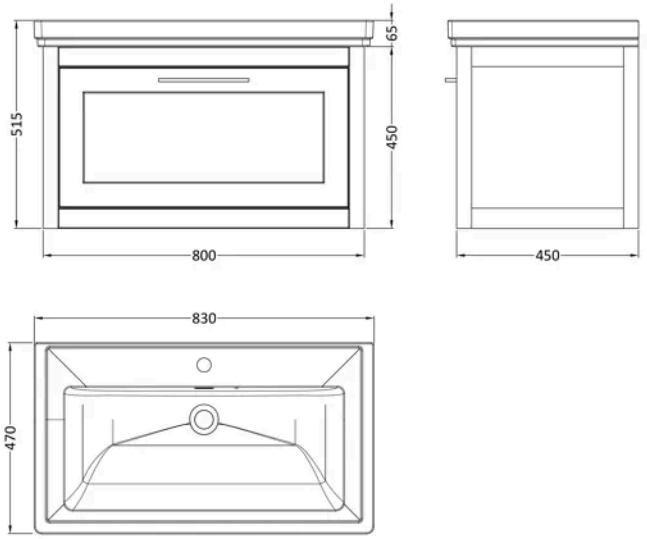

Product Dimensions

Product	515 x 830 x 470mm (H x W x D)
Packaged	465 x 820 x 475mm (H x W x D)
Nett Weight	46.8 kg
Packaged Weight	46.8 kg

Product Details

Country of Origin	China
Product Material	Fireclay,Mdf Vinyl Smooth Matt
Colour/Finish	Earls Grey
Mount Type	Wall Hung
Style	Traditional
Handle Type	D Shape
Construction Method	Cam & Wood Dowel
Construction Type	Rigid
Drawer Type	80mm High Metal S/C Inc Gallery
Fascia Finish	Mdf Vinyl Smooth Matt
Fsc Certified	Yes
Handles Included	Yes
Inner Bowl Depth	295 mm
Inner Bowl Height	134 mm
Inner Bowl Width	680 mm
Leg Set Included	No
Material Thickness	18 mm
No. Drawers	1
No. Of Tapholes	1
Number Of Bowls	1
Overflow Cover Included	Yes
Overflow Included	Yes
Tap Included	No
Waste Included	No
Waste Shroud	Yes

© ROXOR Group

Sales Code: CRE296 **Barcode:** 5056678463024 **Brand:** BC Designs **Description:** BC Designs Crestfield 800mm Earls Grey Wall Hung Vanity Unit



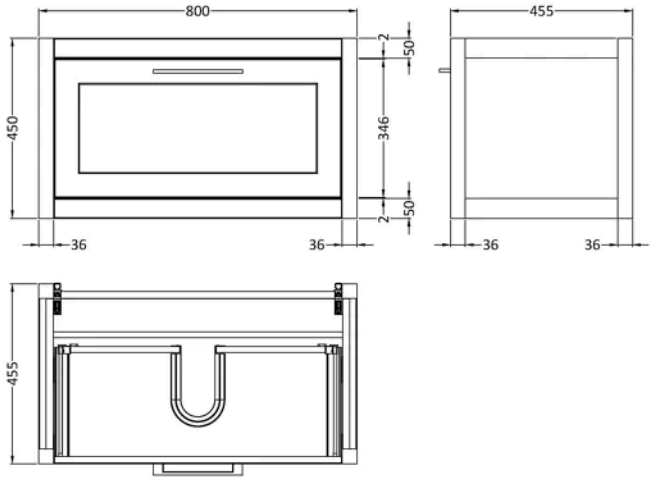

Product Dimensions

Product	450 x 800 x 455mm (H x W x D)
Packaged	470 x 820 x 475mm (H x W x D)
Nett Weight	23.8 kg
Packaged Weight	24.3 kg

Packaging Details

Box Qty	1

Product Details

Country of Origin	China
Product Material	Mdf Vinyl Smooth Matt
Colour/Finish	Earls Grey
Mount Type	Wall Hung
Style	Traditional
Construction Method	Cam & Wood Dowel
Construction Type	Rigid
Drawer Type	80mm High Metal S/C Inc Gallery
Fascia Finish	Mdf Vinyl Smooth Matt
Fsc Certified	Yes
Handles Included	Yes
Material Thickness	18 mm

© ROXOR Group

Sales Code: FFB505 **Barcode:** 5056678471180 **Brand:** BC Designs **Description:** BC Designs 800mm 1 Tap Hole Traditional Fireclay Basin



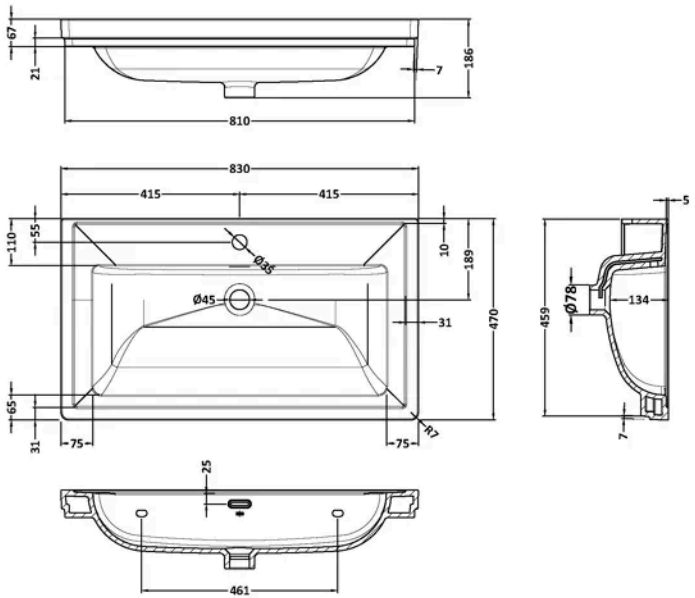

Product Dimensions

Product	186 x 830 x 470mm (H x W x D)
Packaged	492 x 860 x 205mm (H x W x D)
Nett Weight	22.2 kg
Packaged Weight	22.5 kg

Packaging Details

Box Qty	1

Product Details

Country of Origin	United Arab Emirates
Product Material	Fireclay
Colour/Finish	White
Style	Contemporary
Ce Certified	Yes
Inner Bowl Height	134 mm
No. Of Tapholes	1
Number Of Bowls	1
Overflow Included	Yes
Tap Included	No
Waste Included	No

© ROXOR Group