Sales Code: CSF291B

Barcode: 5056817712440

Brand: BC Designs

Description: BC Designs Crestfield 500mm Earls Grey 1 Drawer Wall Hung Vanity Unit With 3 Tap Hole Fireclay Basin



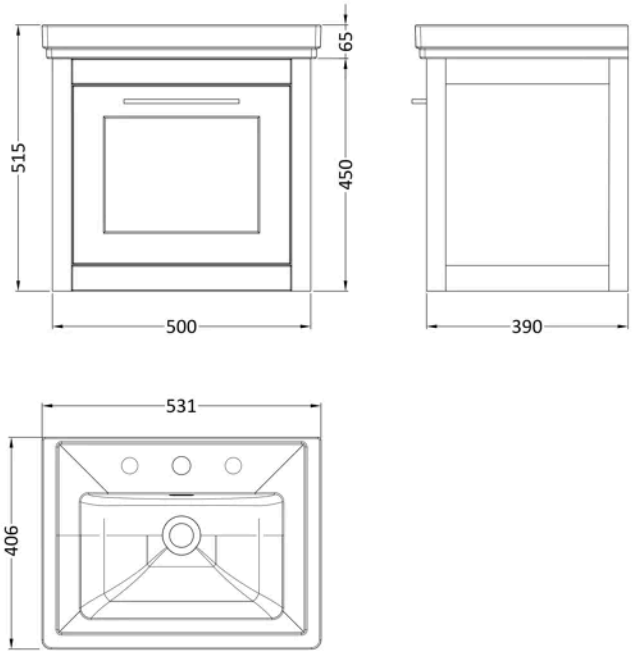

Product Dimensions

Product	515 x 531 x 406mm (H x W x D)
Packaged	465 x 520 x 415mm (H x W x D)
Nett Weight	31 kg
Packaged Weight	31 kg

Product Details

Country of Origin	China
Product Material	Fireclay,Mdf Vinyl Smooth Matt
Colour/Finish	Earls Grey
Mount Type	Wall Hung
Style	Traditional
Handle Type	D Shape
Construction Method	Cam & Wood Dowel
Construction Type	Rigid
Drawer Type	80mm High Metal S/C Inc Gallery
Fascia Finish	Mdf Vinyl Smooth Matt
Fsc Certified	Yes
Handles Included	Yes
Inner Bowl Depth	234 mm
Inner Bowl Height	136 mm
Inner Bowl Width	381 mm
Leg Set Included	No
Material Thickness	18 mm
No. Drawers	1
No. Of Tapholes	3
Number Of Bowls	1
Overflow Cover Included	Yes
Overflow Included	Yes
Tap Included	No
Waste Included	No
Waste Shroud	Yes

© ROXOR Group

Sales Code: CRE291 **Barcode:** 5056678463185 **Brand:** BC Designs **Description:** BC Designs Crestfield 500mm Earls Grey Wall Hung Vanity Unit

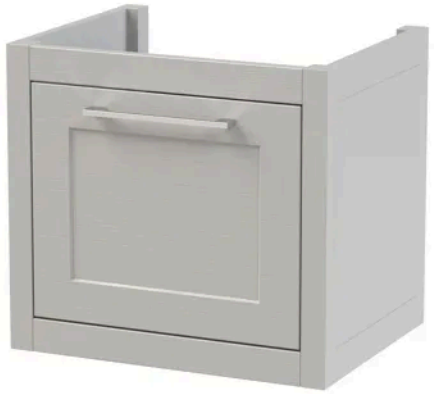

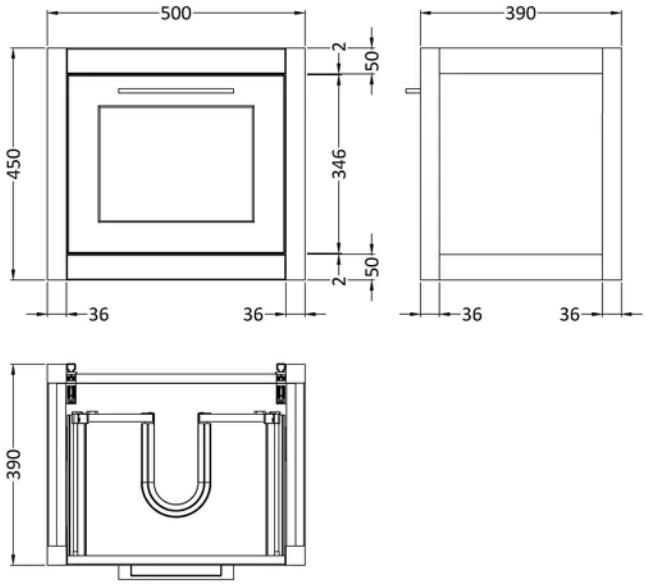

Product Dimensions

Product	450 x 500 x 390mm (H x W x D)
Packaged	470 x 520 x 410mm (H x W x D)
Nett Weight	17 kg
Packaged Weight	17.5 kg

Packaging Details

Box Qty	1

Product Details

Country of Origin	China
Product Material	Mdf Vinyl Smooth Matt
Colour/Finish	Earls Grey
Mount Type	Wall Hung
Style	Traditional
Construction Method	Cam & Wood Dowel
Construction Type	Rigid
Drawer Type	80mm High Metal S/C Inc Gallery
Fascia Finish	Mdf Vinyl Smooth Matt
Fsc Certified	Yes
Handles Included	Yes
Material Thickness	18 mm
No. Drawers	1

© ROXOR Group

Sales Code: FFB532 **Barcode:** 5056678462522 **Brand:** BC Designs **Description:** BC Designs 500mm 3 Tap Hole Traditional Fireclay Basin



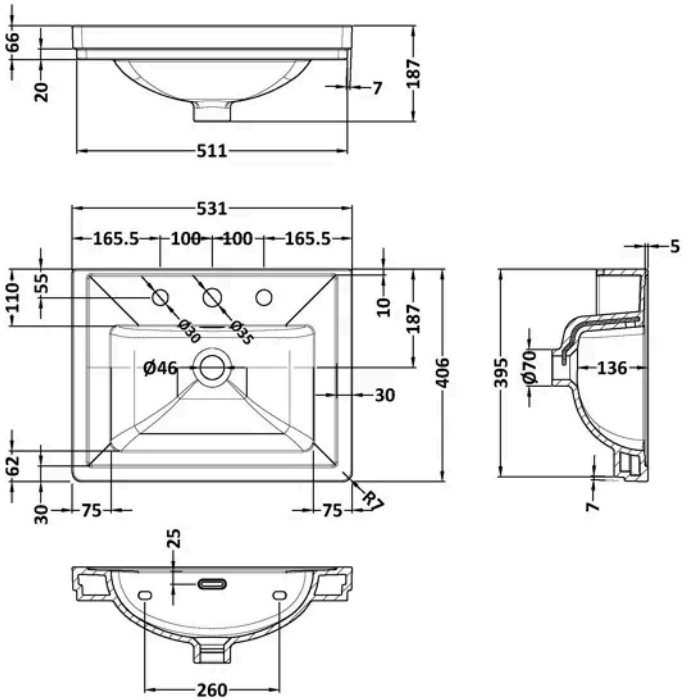

Product Dimensions

Product	187 x 531 x 406mm (H x W x D)
Packaged	430 x 550 x 220mm (H x W x D)
Nett Weight	13.5 kg
Packaged Weight	13.5 kg

Packaging Details

Box Qty	1

Product Details

Country of Origin	United Arab Emirates
Product Material	Fireclay
Colour/Finish	White
Style	Traditional
Bottle Trap Included	No
Ce Certified	Yes
Inner Bowl Depth	234 mm
Inner Bowl Height	136 mm
Inner Bowl Width	531 mm
No. Of Tapholes	3
Number Of Bowls	1
Waste Included	No

© ROXOR Group