**Sales Code:** CSF196CMT

**Barcode:** 5056817713256

**Brand:** BC Designs

**Description:** BC Designs Crestfield 800mm Nimbus White 1 Drawer Wall Hung Vanity Unit With Carrara Marble Worktop



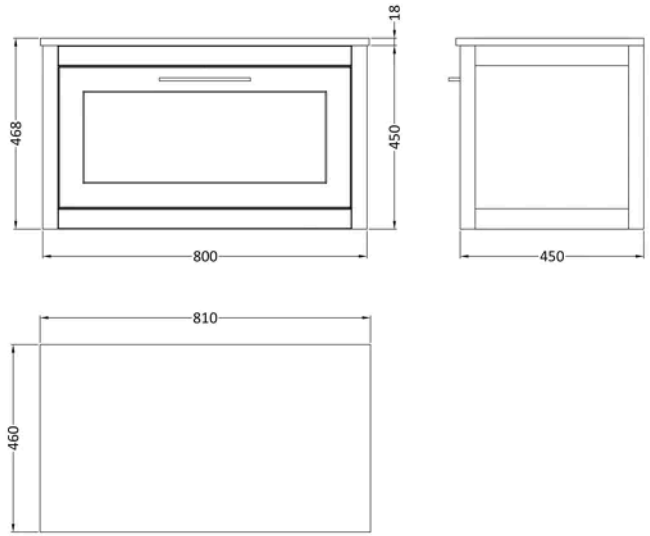


## Product Dimensions

| | |
|---|---|
| Product | 468 x 810 x 460mm (H x W x D) |
| Packaged | 465 x 820 x 475mm (H x W x D) |
| Nett Weight | 42.3 kg |
| Packaged Weight | 42.3 kg |

## Product Details

| | |
|---|---|
| Country of Origin | China |
| Product Material | Mdf Vinyl Smooth Matt,Natural Marble |
| Colour/Finish | Nimbus White |
| Mount Type | Wall Hung |
| Style | Traditional |
| Handle Type | D Shape |
| Construction Method | Cam & Wood Dowel |
| Construction Type | Rigid |
| Drawer Type | 80mm High Metal S/C Inc Gallery |
| Fascia Finish | Mdf Vinyl Smooth Matt |
| Fsc Certified | Yes |
| Handles Included | Yes |
| Material Thickness | 18 mm |
| No. Drawers | 1 |
| Waste Shroud | Yes |

© ROXOR Group

**Sales Code:** CRE196 **Barcode:** 5056678463017 **Brand:** BC Designs **Description:** BC Designs Crestfield 800mm Nimbus White Wall Hung Vanity Unit



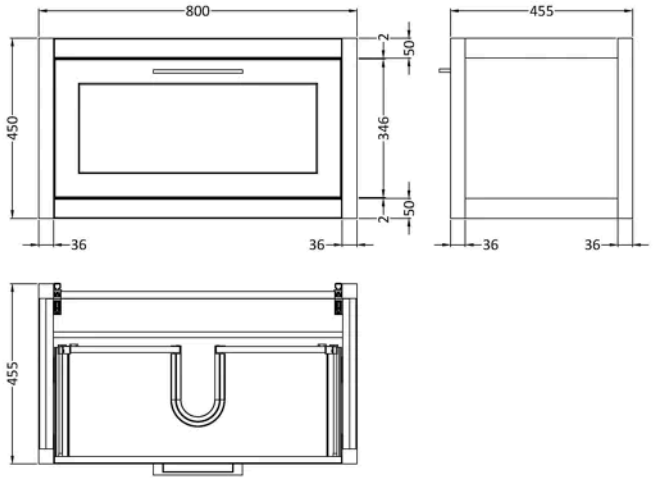


## Product Dimensions

| | |
|---|---|
| Product | 450 x 800 x 455mm (H x W x D) |
| Packaged | 470 x 820 x 475mm (H x W x D) |
| Nett Weight | 23.5 kg |
| Packaged Weight | 24.3 kg |

## Packaging Details

| | |
|---|---|
| Box Qty | 1 |

## Product Details

| | |
|---|---|
| Country of Origin | China |
| Product Material | Mdf Vinyl Smooth Matt |
| Colour/Finish | Nimbus White |
| Mount Type | Wall Hung |
| Style | Traditional |
| Construction Method | Cam & Wood Dowel |
| Construction Type | Rigid |
| Drawer Type | 80mm High Metal S/C Inc Gallery |
| Fascia Finish | Mdf Vinyl Smooth Matt |
| Fsc Certified | Yes |
| Handles Included | Yes |
| Material Thickness | 18 mm |

© ROXOR Group

**Sales Code:** MFBT98046 **Barcode:** 5056678472989 **Brand:** BC Designs **Description:** BC Designs 810 x 460mm Carrera Marble Top



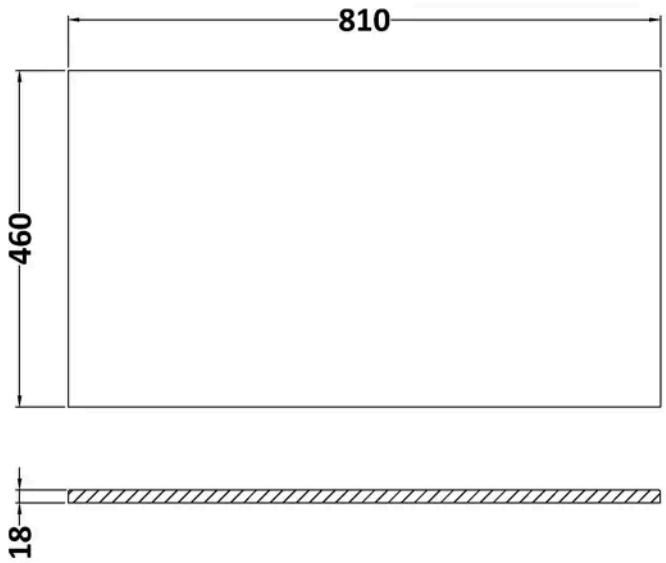


## Product Dimensions

| | |
|---|---|
| Product | 18 x 810 x 460mm (H x W x D) |
| Packaged | 35 x 850 x 500mm (H x W x D) |
| Nett Weight | 17.5 kg |
| Packaged Weight | 18 kg |

## Packaging Details

| | |
|---|---|
| Box Qty | 1 |
| Label Size (mm) | 50 x 100 |
| Label Colour | White |
| Label Qty | 1.0000 |

## Product Details

| | |
|---|---|
| Country of Origin | China |
| Product Material | Natural Marble |
| Colour/Finish | Carrera Marble |
| Style | Contemporary |
| Fixings Included | No |
| Fsc Certified | Yes |
| Material Thickness | 18 mm |

© ROXOR Group