Sales Code: CSF194CMT2

Barcode: 5056817722241

Brand: BC Designs

Description: BC Designs Crestfield 1200mm Nimbus White 2 Drawer Wall Hung Vanity Unit With Carrara Marble Worktop



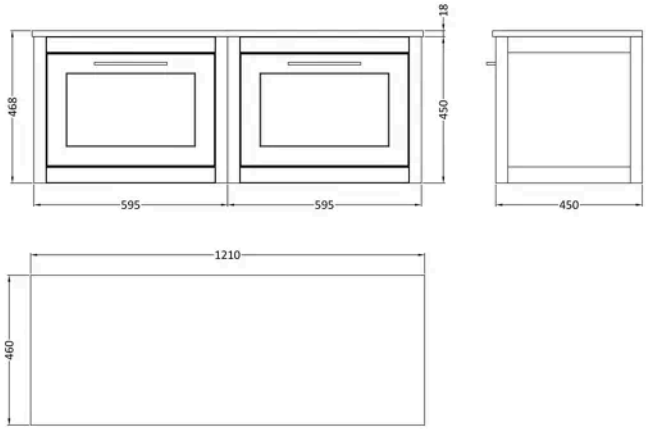

Product Dimensions

Product	468 x 1210 x 460mm (H x W x D)
Packaged	465 x 1220 x 475mm (H x W x D)
Nett Weight	67 kg
Packaged Weight	67 kg

Product Details

Country of Origin	China
Product Material	Fireclay,Mdf Vinyl Smooth Matt
Colour/Finish	Nimbus White
Mount Type	Wall Hung
Style	Traditional
Handle Type	D Shape
Construction Method	Cam & Wood Dowel
Construction Type	Rigid
Drawer Type	80mm High Metal S/C Inc Gallery
Fascia Finish	Mdf Vinyl Smooth Matt
Fsc Certified	Yes
Handles Included	Yes
Material Thickness	18 mm
No. Drawers	2
Waste Shroud	Yes

© ROXOR Group

Sales Code: CRE194 **Barcode:** 5056678463130 **Brand:** BC Designs **Description:** BC Designs Crestfield 600mm Nimbus White Wall Hung Vanity Unit



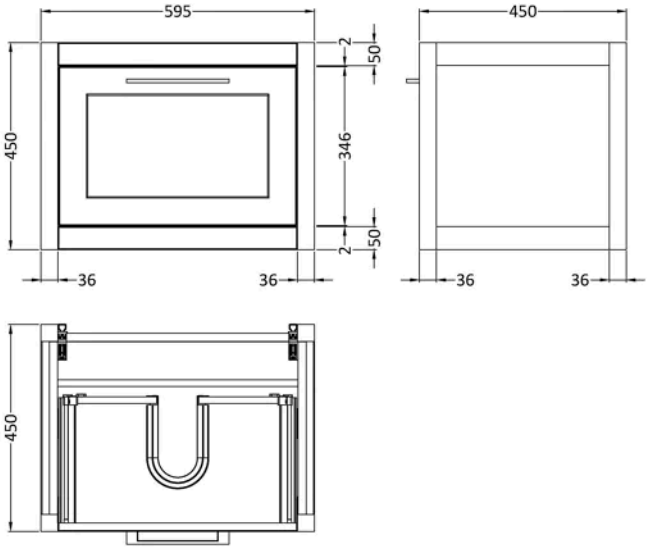

Product Dimensions

Product	450 x 595 x 450mm (H x W x D)
Packaged	470 x 615 x 470mm (H x W x D)
Nett Weight	20 kg
Packaged Weight	20.5 kg

Packaging Details

Box Qty	1

Product Details

Country of Origin	China
Product Material	Mdf Vinyl Smooth Matt
Colour/Finish	Nimbus White
Mount Type	Wall Hung
Style	Traditional
Construction Method	Cam & Wood Dowel
Construction Type	Rigid
Drawer Type	80mm High Metal S/C Inc Gallery
Fascia Finish	Mdf Vinyl Smooth Matt
Fsc Certified	Yes
Handles Included	Yes
Material Thickness	18 mm
No. Drawers	1

© ROXOR Group

Sales Code: MFBT91246 **Barcode:** 5056678472958 **Brand:** BC Designs **Description:** BC Designs 1210 x 460mm Carrera Marble Top



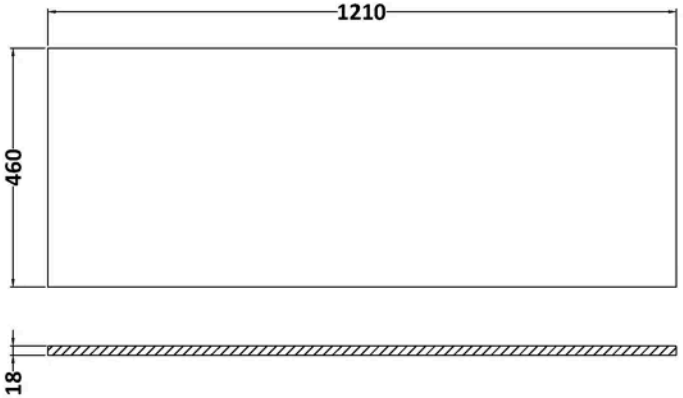

Product Dimensions

Product	18 x 1210 x 460mm (H x W x D)
Packaged	35 x 1250 x 500mm (H x W x D)
Nett Weight	25.5 kg
Packaged Weight	26 kg

Packaging Details

Box Qty	1
Label Size (mm)	50 x 100
Label Colour	White
Label Qty	1.0000

Product Details

Country of Origin	China
Product Material	Natural Marble
Colour/Finish	Carrera Marble
Style	Contemporary
Fixings Included	No
Fsc Certified	Yes
Material Thickness	18 mm

© ROXOR Group