Sales Code: CSF194B

Barcode: 5056817712754

Brand: BC Designs

Description: BC Designs Crestfield 600mm Nimbus White 1 Drawer Wall Hung Vanity Unit With 3 Tap Hole Fireclay Basin



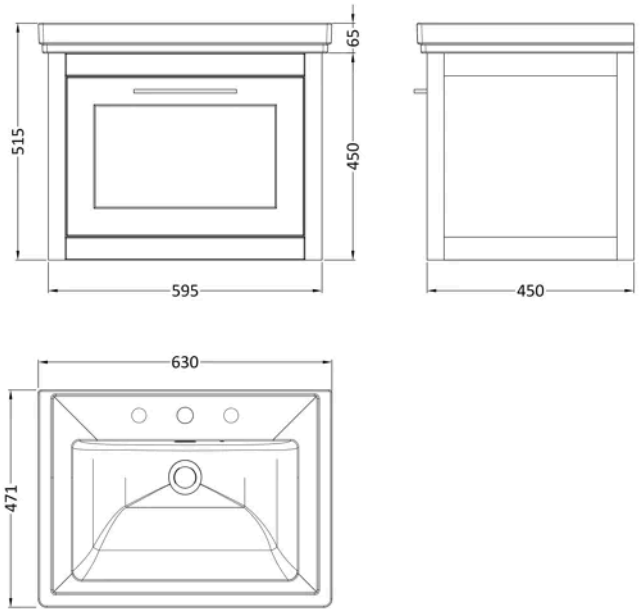

Product Dimensions

Product	515 x 630 x 471mm (H x W x D)
Packaged	465 x 620 x 475mm (H x W x D)
Nett Weight	37.8 kg
Packaged Weight	37.8 kg

Product Details

Country of Origin	China
Product Material	Fireclay,Mdf Vinyl Smooth Matt
Colour/Finish	Nimbus White
Mount Type	Wall Hung
Style	Traditional
Handle Type	D Shape
Construction Method	Cam & Wood Dowel
Construction Type	Rigid
Drawer Type	80mm High Metal S/C Inc Gallery
Fascia Finish	Mdf Vinyl Smooth Matt
Fsc Certified	Yes
Handles Included	Yes
Inner Bowl Depth	299 mm
Inner Bowl Height	135 mm
Inner Bowl Width	480 mm
Leg Set Included	No
Material Thickness	18 mm
No. Drawers	1
No. Of Tapholes	3
Number Of Bowls	1
Overflow Cover Included	Yes
Overflow Included	Yes
Tap Included	No
Waste Included	No
Waste Shroud	Yes

© ROXOR Group

Sales Code: CRE194 **Barcode:** 5056678463130 **Brand:** BC Designs **Description:** BC Designs Crestfield 600mm Nimbus White Wall Hung Vanity Unit



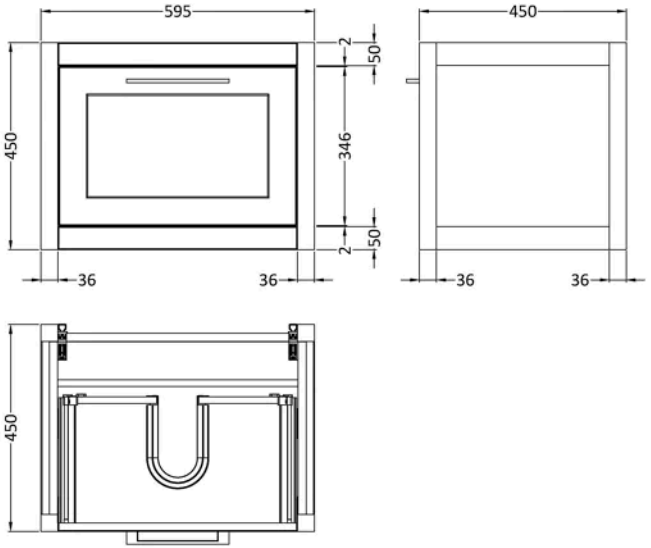

Product Dimensions

Product	450 x 595 x 450mm (H x W x D)
Packaged	470 x 615 x 470mm (H x W x D)
Nett Weight	20 kg
Packaged Weight	20.5 kg

Packaging Details

Box Qty	1

Product Details

Country of Origin	China
Product Material	Mdf Vinyl Smooth Matt
Colour/Finish	Nimbus White
Mount Type	Wall Hung
Style	Traditional
Construction Method	Cam & Wood Dowel
Construction Type	Rigid
Drawer Type	80mm High Metal S/C Inc Gallery
Fascia Finish	Mdf Vinyl Smooth Matt
Fsc Certified	Yes
Handles Included	Yes
Material Thickness	18 mm
No. Drawers	1

© ROXOR Group

Sales Code: FFB533 **Barcode:** 5056678471166 **Brand:** BC Designs **Description:** BC Designs 600mm 3 Tap Hole Traditional Fireclay Basin



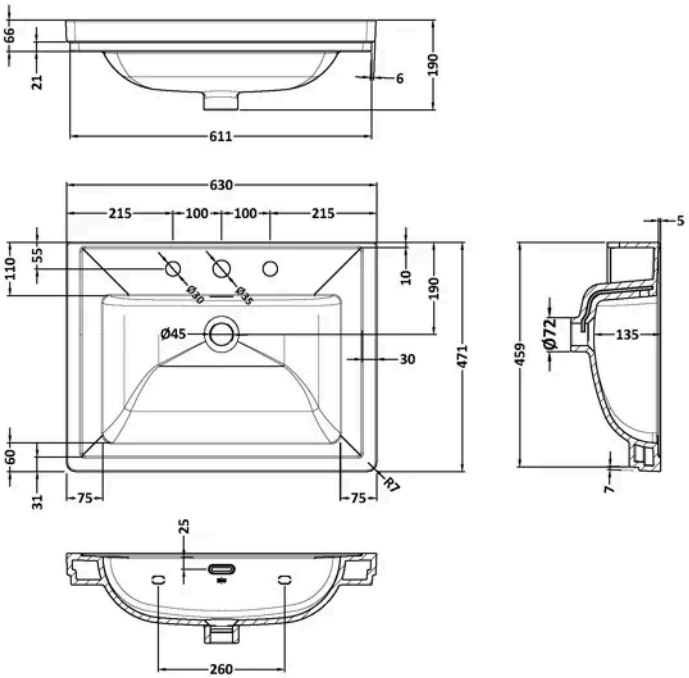

Product Dimensions

Product	190 x 630 x 471mm (H x W x D)
Packaged	490 x 650 x 220mm (H x W x D)
Nett Weight	17 kg
Packaged Weight	17.3 kg

Packaging Details

Box Qty	1

Product Details

Country of Origin	United Arab Emirates
Product Material	Fireclay
Colour/Finish	White
Style	Contemporary
Ce Certified	Yes
Inner Bowl Height	135 mm
No. Of Tapholes	3
Number Of Bowls	1
Overflow Included	Yes
Tap Included	No
Waste Included	No

© ROXOR Group