**Sales Code:** CSF191A

**Barcode:** 5056817712464

**Brand:** BC Designs

**Description:** BC Designs Crestfield 500mm Nimbus White 1 Drawer Wall Hung Vanity Unit With 1 Tap Hole Fireclay Basin



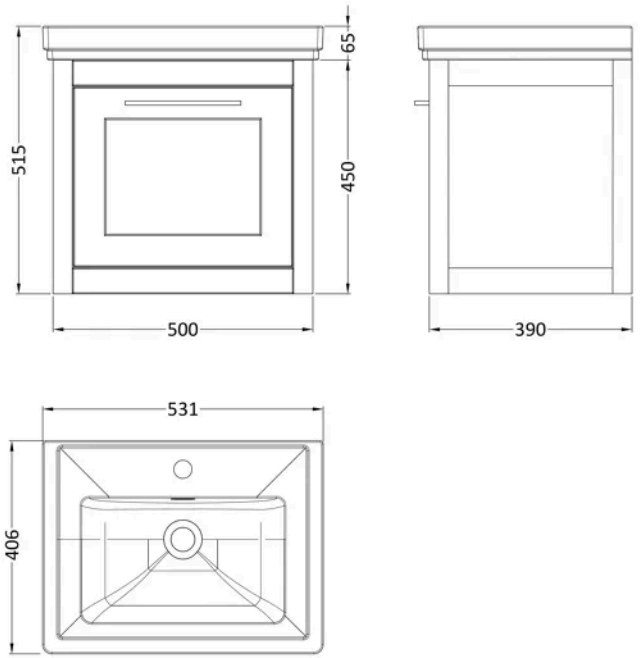


## Product Dimensions

| | |
|---|---|
| Product | 515 x 531 x 406mm (H x W x D) |
| Packaged | 465 x 520 x 415mm (H x W x D) |
| Nett Weight | 13.5 kg |
| Packaged Weight | 13.5 kg |

## Product Details

| | |
|---|---|
| Country of Origin | China |
| Product Material | Fireclay,Mdf Vinyl Smooth Matt |
| Colour/Finish | Nimbus White |
| Mount Type | Wall Hung |
| Style | Traditional |
| Handle Type | D Shape |
| Construction Method | Cam & Wood Dowel |
| Construction Type | Rigid |
| Drawer Type | 80mm High Metal S/C Inc Gallery |
| Fascia Finish | Mdf Vinyl Smooth Matt |
| Fsc Certified | Yes |
| Handles Included | Yes |
| Inner Bowl Depth | 234 mm |
| Inner Bowl Height | 136 mm |
| Inner Bowl Width | 381 mm |
| Leg Set Included | No |
| Material Thickness | 18 mm |
| No. Drawers | 1 |
| No. Of Tapholes | 1 |
| Number Of Bowls | 1 |
| Overflow Cover Included | Yes |
| Overflow Included | Yes |
| Tap Included | No |
| Waste Included | No |
| Waste Shroud | Yes |

© ROXOR Group

**Sales Code:** CRE191 **Barcode:** 5056678463178 **Brand:** BC Designs **Description:** BC Designs Crestfield 500mm Nimbus White Wall Hung Vanity Unit



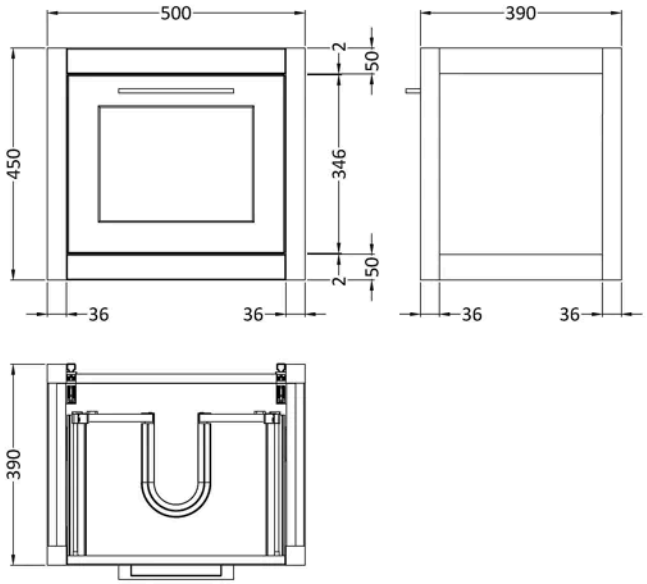


## Product Dimensions

| | |
|---|---|
| Product | 450 x 500 x 390mm (H x W x D) |
| Packaged | 470 x 520 x 410mm (H x W x D) |
| Nett Weight | 17 kg |
| Packaged Weight | 17.5 kg |

## Packaging Details

| | |
|---|---|
| Box Qty | 1 |

## Product Details

| | |
|---|---|
| Country of Origin | China |
| Product Material | Mdf Vinyl Smooth Matt |
| Colour/Finish | Nimbus White |
| Mount Type | Wall Hung |
| Style | Traditional |
| Construction Method | Cam & Wood Dowel |
| Construction Type | Rigid |
| Drawer Type | 80mm High Metal S/C Inc Gallery |
| Fascia Finish | Mdf Vinyl Smooth Matt |
| Fsc Certified | Yes |
| Handles Included | Yes |
| Material Thickness | 18 mm |
| No. Drawers | 1 |

© ROXOR Group

**Sales Code:** FFB502 **Barcode:** 5056678462539 **Brand:** BC Designs **Description:** BC Designs 500mm 1 Tap Hole Traditional Fireclay Basin



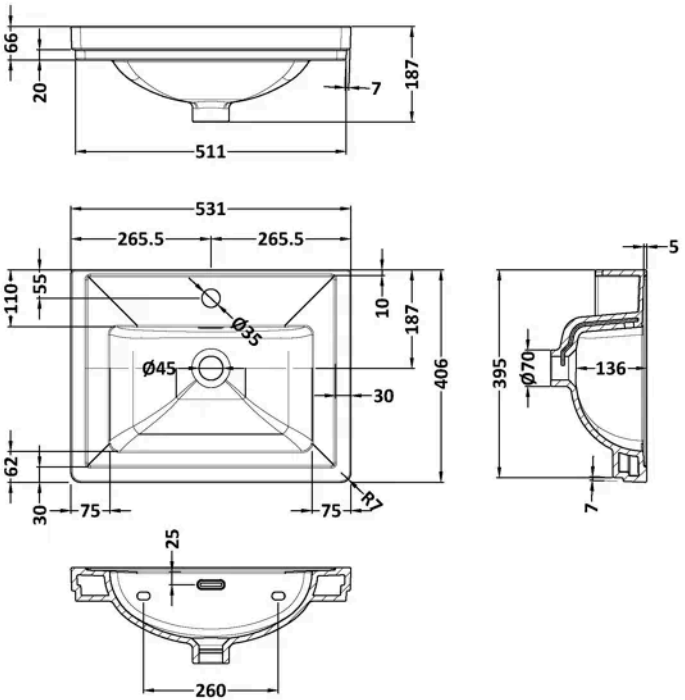


## Product Dimensions

| | |
|---|---|
| Product | 187 x 531 x 406mm (H x W x D) |
| Packaged | 430 x 550 x 220mm (H x W x D) |
| Nett Weight | 13.5 kg |
| Packaged Weight | 13.5 kg |

## Packaging Details

| | |
|---|---|
| Box Qty | 1 |

## Product Details

| | |
|---|---|
| Country of Origin | United Arab Emirates |
| Product Material | Fireclay |
| Colour/Finish | White |
| Style | Traditional |
| Bottle Trap Included | No |
| Ce Certified | Yes |
| Inner Bowl Depth | 234 mm |
| Inner Bowl Height | 136 mm |
| Inner Bowl Width | 381 mm |
| No. Of Tapholes | 1 |
| Number Of Bowls | 1 |
| Overflow Included | Yes |
| Tap Included | No |
| Waste Included | No |

© ROXOR Group