**Sales Code:** CSF1496H

**Barcode:** 5056817712983

**Brand:** BC Designs

**Description:** BC Designs Crestfield 800mm Dark Lead 1 Drawer Wall Hung Vanity Unit With Fireclay Basin



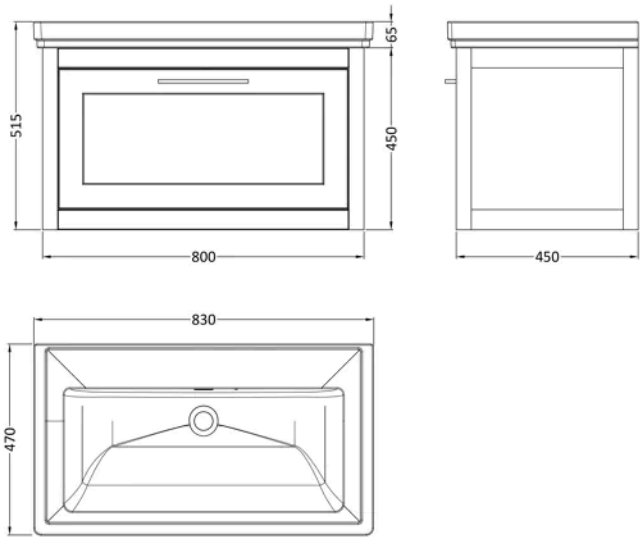


## Product Dimensions

| | |
|---|---|
| Product | 515 x 830 x 470mm (H x W x D) |
| Packaged | 465 x 820 x 475mm (H x W x D) |
| Nett Weight | 46.8 kg |
| Packaged Weight | 46.8 kg |

## Product Details

| | |
|---|---|
| Country of Origin | China |
| Product Material | Fireclay,Mdf Vinyl Smooth Matt |
| Colour/Finish | Dark Lead |
| Mount Type | Wall Hung |
| Style | Traditional |
| Handle Type | D Shape |
| Construction Method | Cam & Wood Dowel |
| Construction Type | Rigid |
| Drawer Type | 80mm High Metal S/C Inc Gallery |
| Fascia Finish | Mdf Vinyl Smooth Matt |
| Fsc Certified | Yes |
| Handles Included | Yes |
| Inner Bowl Depth | 295 mm |
| Inner Bowl Height | 134 mm |
| Inner Bowl Width | 680 mm |
| Leg Set Included | No |
| Material Thickness | 18 mm |
| No. Drawers | 1 |
| No. Of Tapholes | No Tapholes |
| Number Of Bowls | 1 |
| Overflow Cover Included | Yes |
| Overflow Included | Yes |
| Tap Included | No |
| Waste Included | No |
| Waste Shroud | Yes |

© ROXOR Group

**Sales Code:** CRE1496 **Barcode:** 5056678463031 **Brand:** BC Designs **Description:** BC Designs Crestfield 800mm Dark Lead 1 Drawer Wall Hung Vanity Unit



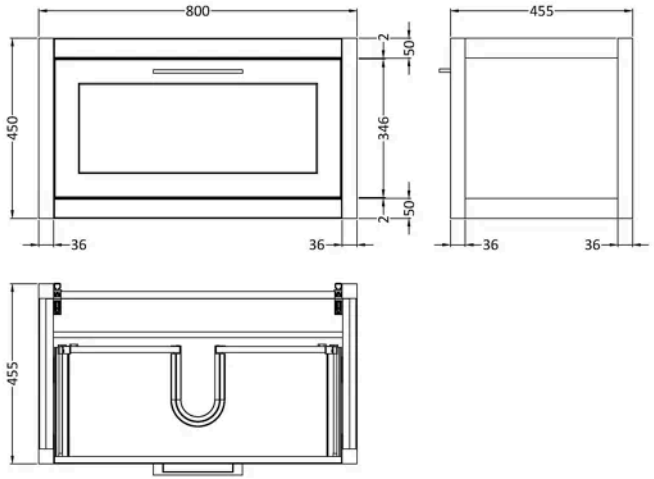


## Product Dimensions

| | |
|---|---|
| Product | 450 x 800 x 455mm (H x W x D) |
| Packaged | 470 x 820 x 475mm (H x W x D) |
| Nett Weight | 23.8 kg |
| Packaged Weight | 24.3 kg |

## Packaging Details

| | |
|---|---|
| Box Qty | 1 |

## Product Details

| | |
|---|---|
| Country of Origin | China |
| Product Material | Mdf Vinyl Smooth Matt |
| Colour/Finish | Dark Lead |
| Mount Type | Wall Hung |
| Style | Traditional |
| Construction Method | Cam & Wood Dowel |
| Construction Type | Rigid |
| Drawer Type | 80mm High Metal S/C Inc Gallery |
| Fascia Finish | Mdf Vinyl Smooth Matt |
| Fsc Certified | Yes |
| Handles Included | Yes |
| Material Thickness | 18 mm |
| No. Drawers | 1 |

© ROXOR Group

**Sales Code:** FFB515 **Barcode:** 5056678471203 **Brand:** BC Designs **Description:** BC Designs 800mm 0 Tap Hole Traditional Fireclay Basin



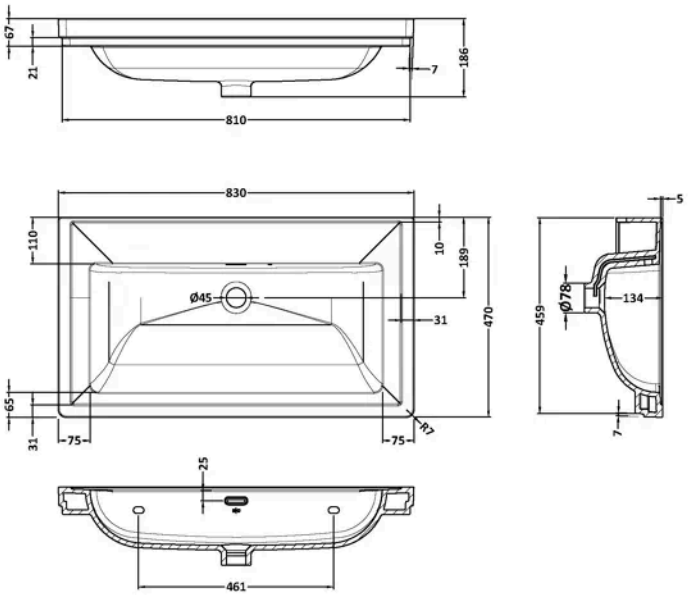


## Product Dimensions

| | |
|---|---|
| Product | 186 x 830 x 470mm (H x W x D) |
| Packaged | 492 x 860 x 205mm (H x W x D) |
| Nett Weight | 22.2 kg |
| Packaged Weight | 22.5 kg |

## Packaging Details

| | |
|---|---|
| Box Qty | 1 |

## Product Details

| | |
|---|---|
| Country of Origin | United Arab Emirates |
| Product Material | Fireclay |
| Colour/Finish | White |
| Style | Contemporary |
| Ce Certified | Yes |
| Inner Bowl Height | 134 mm |
| No. Of Tapholes | No Tapholes |
| Number Of Bowls | 1 |
| Overflow Included | Yes |
| Tap Included | No |
| Waste Included | No |

© ROXOR Group