Sales Code: CSF1496CMT

Barcode: 5056817713058

Brand: BC Designs

Description: BC Designs Crestfield 810mm Dark Lead 1 Drawer Wall Hung Vanity Unit With Carrara Marble Worktop



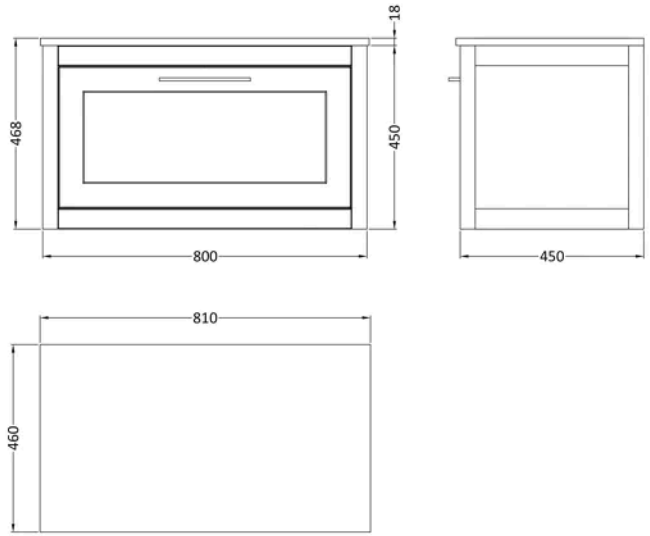

Product Dimensions

Product	468 x 810 x 460mm (H x W x D)
Packaged	465 x 820 x 475mm (H x W x D)
Nett Weight	42.3 kg
Packaged Weight	42.3 kg

Product Details

Country of Origin	China
Product Material	Mdf Vinyl Smooth Matt,Natural Marble
Colour/Finish	Dark Lead
Mount Type	Wall Hung
Style	Traditional
Handle Type	D Shape
Construction Method	Cam & Wood Dowel
Construction Type	Rigid
Drawer Type	80mm High Metal S/C Inc Gallery
Fascia Finish	Mdf Vinyl Smooth Matt
Fsc Certified	Yes
Handles Included	Yes
Material Thickness	18 mm
No. Drawers	1
Waste Shroud	Yes

© ROXOR Group

Sales Code: CRE1496 **Barcode:** 5056678463031 **Brand:** BC Designs **Description:** BC Designs Crestfield 800mm Dark Lead 1 Drawer Wall Hung Vanity Unit



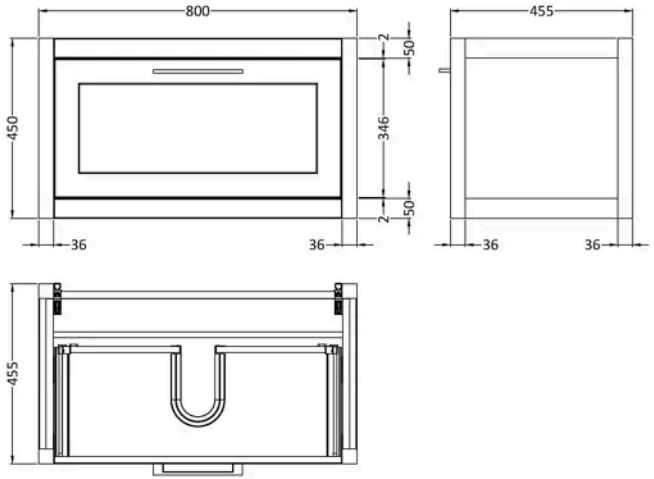

Product Dimensions

Product	450 x 800 x 455mm (H x W x D)
Packaged	470 x 820 x 475mm (H x W x D)
Nett Weight	23.8 kg
Packaged Weight	24.3 kg

Packaging Details

Box Qty	1

Product Details

Country of Origin	China
Product Material	Mdf Vinyl Smooth Matt
Colour/Finish	Dark Lead
Mount Type	Wall Hung
Style	Traditional
Construction Method	Cam & Wood Dowel
Construction Type	Rigid
Drawer Type	80mm High Metal S/C Inc Gallery
Fascia Finish	Mdf Vinyl Smooth Matt
Fsc Certified	Yes
Handles Included	Yes
Material Thickness	18 mm
No. Drawers	1

© ROXOR Group

Sales Code: MFBT98046 **Barcode:** 5056678472989 **Brand:** BC Designs **Description:** BC Designs 810 x 460mm Carrera Marble Top



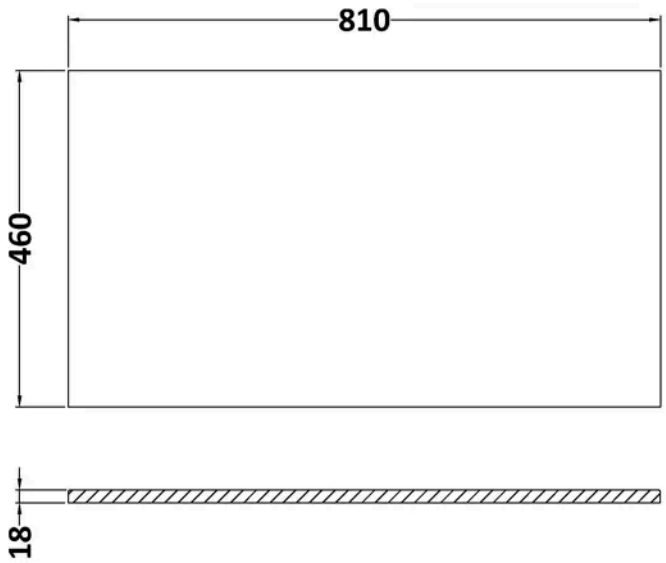

Product Dimensions

Product	18 x 810 x 460mm (H x W x D)
Packaged	35 x 850 x 500mm (H x W x D)
Nett Weight	17.5 kg
Packaged Weight	18 kg

Packaging Details

Box Qty	1
Label Size (mm)	50 x 100
Label Colour	White
Label Qty	1.0000

Product Details

Country of Origin	China
Product Material	Natural Marble
Colour/Finish	Carrera Marble
Style	Contemporary
Fixings Included	No
Fsc Certified	Yes
Material Thickness	18 mm

© ROXOR Group