**Sales Code:** CSF1494WS2

**Barcode:** 5056817712624

**Brand:** BC Designs

**Description:** BC Designs Crestfield 1200mm Dark Lead 2 Drawer Wall Hung Vanity With Twin Marble Basin



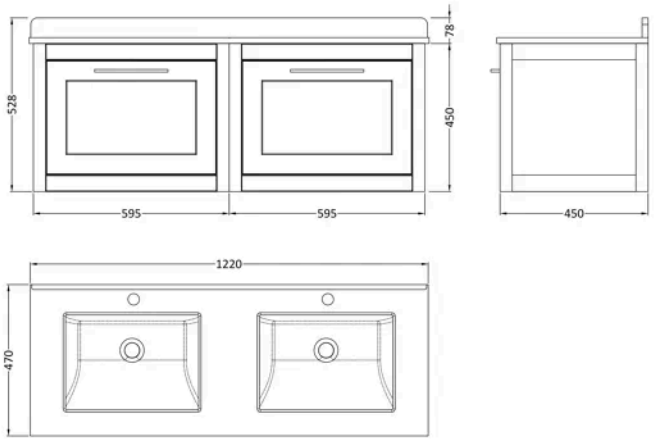


## Product Dimensions

| | |
|---|---|
| Product | 528 x 1220 x 470mm (H x W x D) |
| Packaged | 465 x 1220 x 475mm (H x W x D) |
| Nett Weight | 71 kg |
| Packaged Weight | 71 kg |

## Product Details

| | |
|---|---|
| Country of Origin | China |
| Product Material | Mdf Vinyl Smooth Matt,Natural Marble,Vitreous China |
| Colour/Finish | Dark Lead |
| Mount Type | Wall Hung |
| Style | Traditional |
| Handle Type | D Shape |
| Construction Method | Cam & Wood Dowel |
| Construction Type | Rigid |
| Drawer Type | 80mm High Metal S/C Inc Gallery |
| Fascia Finish | Mdf Vinyl Smooth Matt |
| Fsc Certified | Yes |
| Handles Included | Yes |
| Inner Bowl Depth | 260 mm |
| Inner Bowl Height | 160 mm |
| Inner Bowl Width | 390 mm |
| Leg Set Included | No |
| Material Thickness | 18 mm |
| No. Drawers | 2 |
| No. Of Tapholes | 2 |
| Number Of Bowls | 2 |
| Overflow Cover Included | Yes |
| Overflow Included | Yes |
| Tap Included | No |
| Waste Included | No |
| Waste Shroud | Yes |

© ROXOR Group

**Sales Code:** CRE1494 **Barcode:** 5056678463154 **Brand:** BC Designs **Description:** BC Designs Crestfield 600mm Dark Lead Wall Hung Vanity Unit



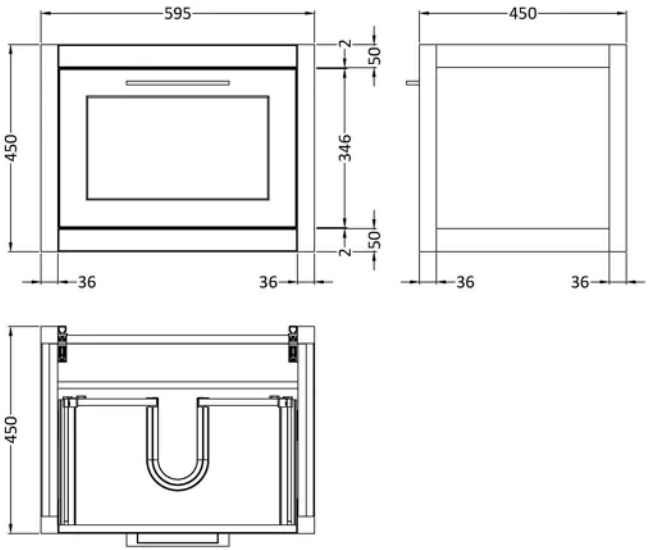


## Product Dimensions

| | |
|---|---|
| Product | 450 x 595 x 450mm (H x W x D) |
| Packaged | 470 x 615 x 470mm (H x W x D) |
| Nett Weight | 19.5 kg |
| Packaged Weight | 20 kg |

## Product Details

| | |
|---|---|
| Country of Origin | China |
| Product Material | Mdf Vinyl Smooth Matt |
| Colour/Finish | Dark Lead |
| Mount Type | Wall Hung |
| Style | Traditional |
| Construction Method | Cam & Wood Dowel |
| Construction Type | Rigid |
| Drawer Type | 80mm High Metal S/C Inc Gallery |
| Fascia Finish | Mdf Vinyl Smooth Matt |
| Fsc Certified | Yes |
| Handles Included | Yes |
| Material Thickness | 18 mm |

© ROXOR Group

**Sales Code:** MFB234 **Barcode:** 5056678471234 **Brand:** BC Designs **Description:** BC Designs 1 Tap Hole 1200mm White Double Bowl Marble Worktop Basin



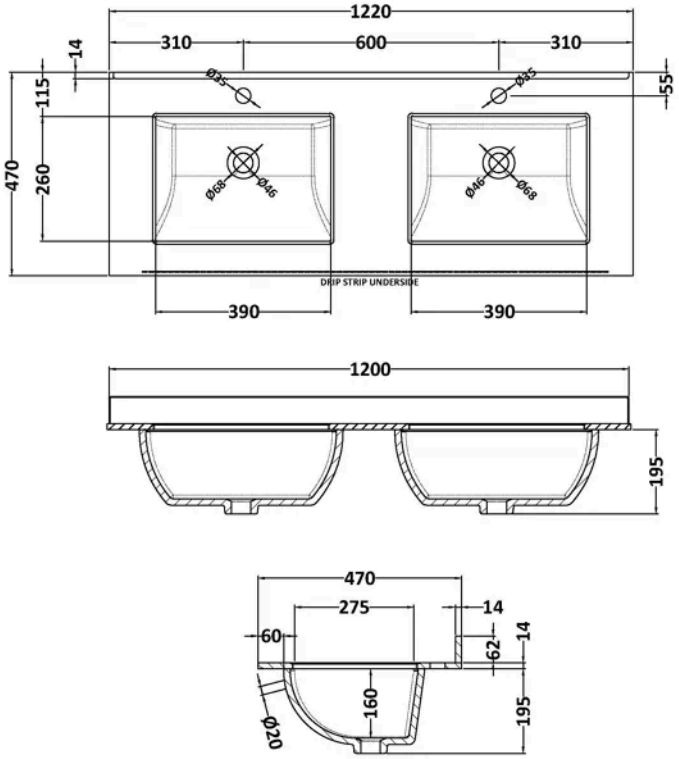


## Product Dimensions

| | |
|---|---|
| Product | 209 x 1220 x 470mm (H x W x D) |
| Packaged | 250 x 1320 x 580mm (H x W x D) |
| Nett Weight | 30.5 kg |
| Packaged Weight | 31 kg |

## Packaging Details

| | |
|---|---|
| Label Size (mm) | 50 x 100 |
| Label Colour | White |
| Label Qty | 2.0000 |

## Product Details

| | |
|---|---|
| Country of Origin | China |
| Product Material | Vitreous China |
| Colour/Finish | White |
| Style | Traditional |
| Bottle Trap Included | No |
| Ce Certified | Yes |
| Inner Bowl Depth | 260 mm |
| Inner Bowl Height | 160 mm |
| Inner Bowl Width | 390 mm |
| No. Of Tapholes | 1 |
| Number Of Bowls | 2 |
| Overflow Cover Included | No |
| Overflow Included | Yes |
| Tap Included | No |
| Waste Included | No |

© ROXOR Group