**Sales Code:** CSF1494A

**Barcode:** 5056817712525

**Brand:** BC Designs

**Description:** BC Designs Crestfield 600mm Dark Lead 1 Drawer Wall Hung Vanity Unit With 1 Tap Hole Fireclay Basin



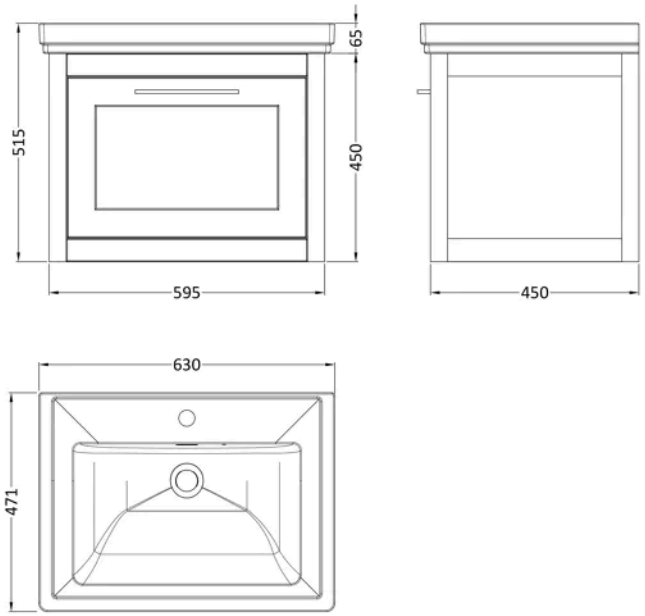


## Product Dimensions

| | |
|---|---|
| Product | 515 x 630 x 471mm (H x W x D) |
| Packaged | 465 x 620 x 475mm (H x W x D) |
| Nett Weight | 37.3 kg |
| Packaged Weight | 37.3 kg |

## Product Details

| | |
|---|---|
| Country of Origin | China |
| Product Material | Fireclay,Mdf Vinyl Smooth Matt |
| Colour/Finish | Dark Lead |
| Mount Type | Wall Hung |
| Style | Traditional |
| Handle Type | D Shape |
| Construction Method | Cam & Wood Dowel |
| Construction Type | Rigid |
| Drawer Type | 80mm High Metal S/C Inc Gallery |
| Fascia Finish | Mdf Vinyl Smooth Matt |
| Fsc Certified | Yes |
| Handles Included | Yes |
| Inner Bowl Depth | 299 mm |
| Inner Bowl Height | 135 mm |
| Inner Bowl Width | 480 mm |
| Leg Set Included | No |
| Material Thickness | 18 mm |
| No. Drawers | 1 |
| No. Of Tapholes | 1 |
| Number Of Bowls | 1 |
| Overflow Cover Included | Yes |
| Overflow Included | Yes |
| Tap Included | No |
| Waste Included | No |
| Waste Shroud | Yes |

© ROXOR Group

**Sales Code:** CRE1494 **Barcode:** 5056678463154 **Brand:** BC Designs **Description:** BC Designs Crestfield 600mm Dark Lead Wall Hung Vanity Unit



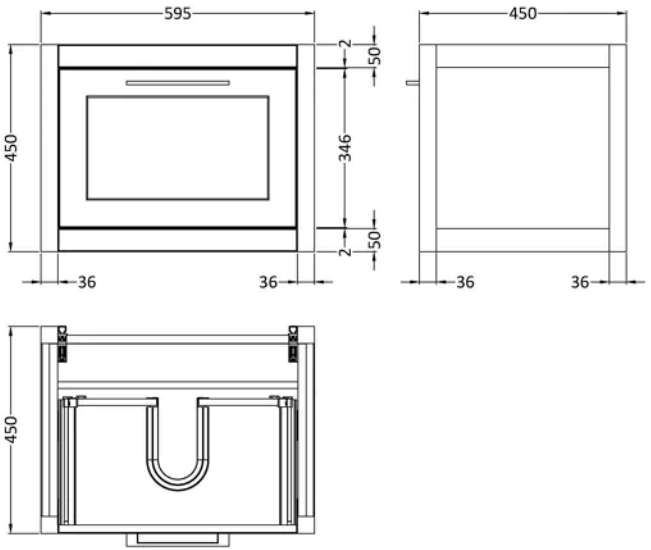


## Product Dimensions

| | |
|---|---|
| Product | 450 x 595 x 450mm (H x W x D) |
| Packaged | 470 x 615 x 470mm (H x W x D) |
| Nett Weight | 19.5 kg |
| Packaged Weight | 20 kg |

## Packaging Details

| | |
|---|---|
| Box Qty | 1 |

## Product Details

| | |
|---|---|
| Country of Origin | China |
| Product Material | Mdf Vinyl Smooth Matt |
| Colour/Finish | Dark Lead |
| Mount Type | Wall Hung |
| Style | Traditional |
| Construction Method | Cam & Wood Dowel |
| Construction Type | Rigid |
| Drawer Type | 80mm High Metal S/C Inc Gallery |
| Fascia Finish | Mdf Vinyl Smooth Matt |
| Fsc Certified | Yes |
| Handles Included | Yes |
| Material Thickness | 18 mm |

© ROXOR Group

**Sales Code:** FFB503 **Barcode:** 5056678471159 **Brand:** BC Designs **Description:** BC Designs 600mm 1 Tap Hole Traditional Fireclay Basin



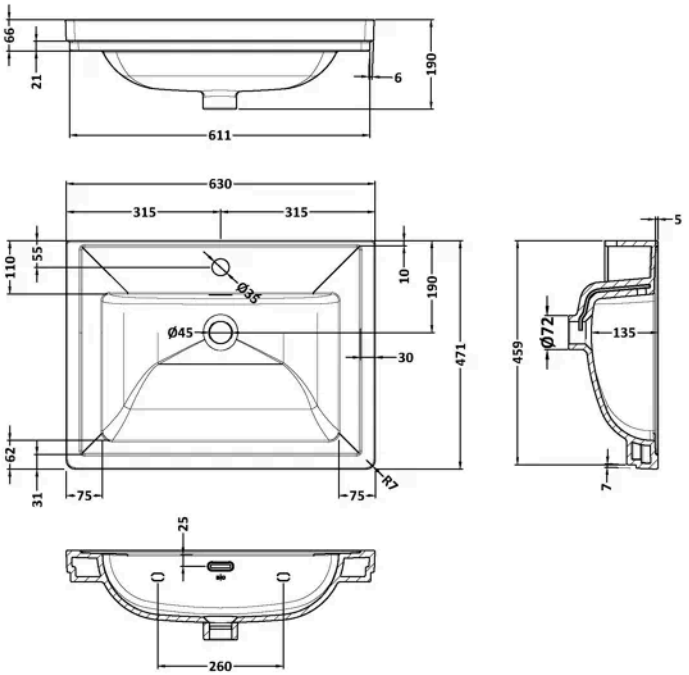


## Product Dimensions

| | |
|---|---|
| Product | 190 x 630 x 471mm (H x W x D) |
| Packaged | 490 x 650 x 220mm (H x W x D) |
| Nett Weight | 17 kg |
| Packaged Weight | 17.3 kg |

## Packaging Details

| | |
|---|---|
| Box Qty | 1 |

## Product Details

| | |
|---|---|
| Country of Origin | United Arab Emirates |
| Product Material | Fireclay |
| Colour/Finish | White |
| Style | Contemporary |
| Ce Certified | Yes |
| Inner Bowl Height | 135 mm |
| No. Of Tapholes | 1 |
| Number Of Bowls | 1 |
| Overflow Included | Yes |
| Tap Included | No |
| Waste Included | No |

© ROXOR Group