Sales Code: CSC210BC **Barcode:** 5056462640150 **Brand:** BC Designs **Description:** BC Sanitan Brushed Chrome 300mm Fixed Shower Head



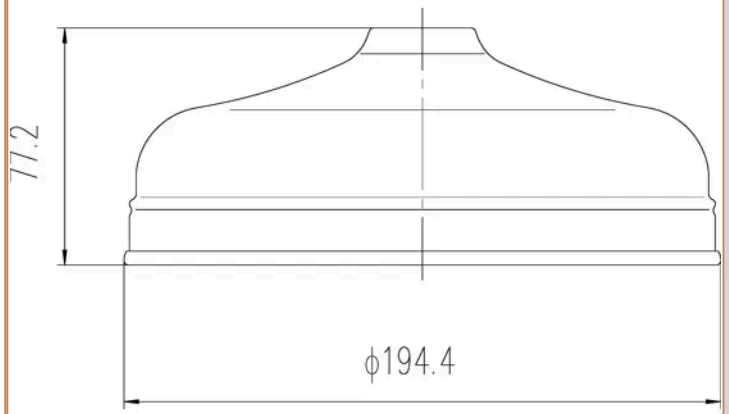

Product Dimensions

Product	160 x 300 x 300mm (H x W x D)
Packaged	320 x 130 x 320mm (H x W x D)
Nett Weight	1.8 kg
Packaged Weight	2.07 kg

Product Details

Country of Origin	China
Product Material	Brass
Colour/Finish	Brushed Chrome
Style	Traditional

© ROXOR Group