Sales Code: CSB120BN

Barcode: 5056462639987

Brand: BC Designs

Description: BC Sanitan Superbe Brushed Nickel Fixed Rigid Riser Kit With 8" Shower Head And Handset



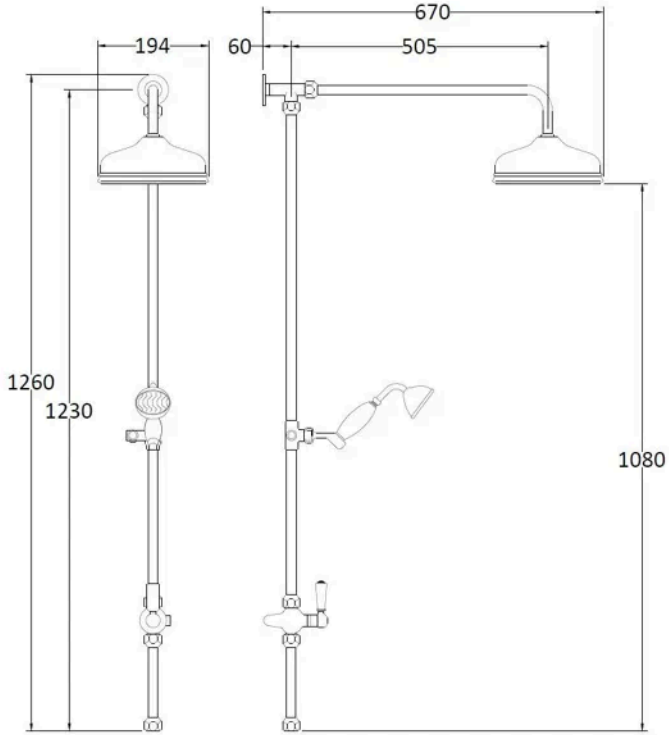

Product Dimensions

Product	1260 x 194 x 670mm (H x W x D)
Packaged	110 x 240 x 1100mm (H x W x D)
Nett Weight	4.7 kg
Packaged Weight	5.2 kg

Product Details

Country of Origin	China
Product Material	Brass
Control Type	Not Applicable
Colour/Finish	Brushed Nickel
Style	Traditional
Min Operating Pressure	0.5 Bar

© ROXOR Group