Sales Code: CSB120 **Barcode:** 5056462639963 **Brand:** BC Designs **Description:** BC Sanitan Superbe Chrome Fixed Rigid Riser Kit With 8" Shower Head And Handset

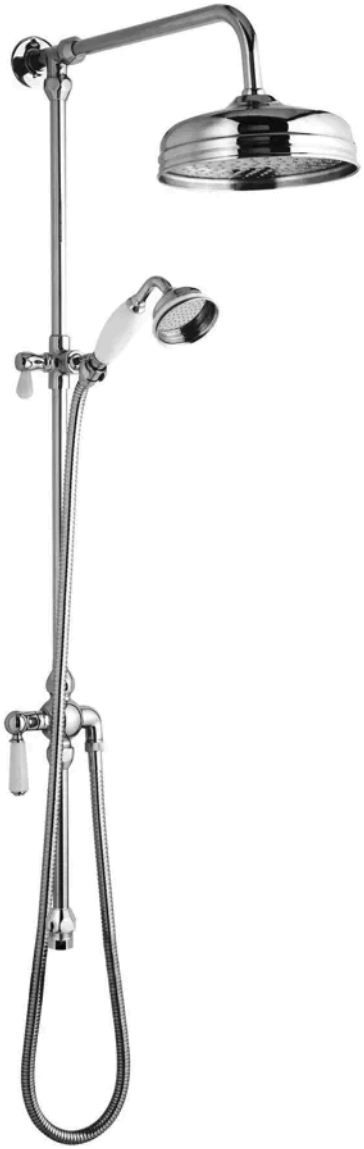

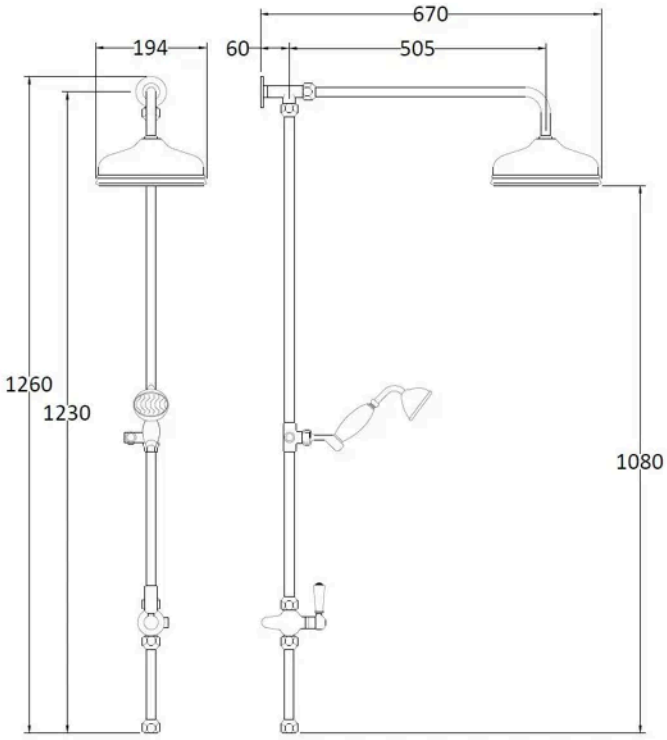

Product Dimensions

Product	1260 x 194 x 670mm (H x W x D)
Packaged	110 x 240 x 1100mm (H x W x D)
Outer Box	800mm (D)
Nett Weight	4.7 kg
Packaged Weight	5.2 kg

Packaging Details

Label Size (mm)	50 x 100
Label Colour	White
Label Qty	2.0000

Product Details

Country of Origin	China
Product Material	Brass
Control Type	Not Applicable
WRAS Approved	No
Colour/Finish	Chrome
Mount Type	Surface/Wall
Style	Traditional
Easy Clean	No
TMV2 Approved	No
TMV3 Approved	No
Pipe Size	18 mm
Handset Included	Yes
Head Included	Yes
Hose Included	Yes
Hose Length	1500 mm
Min Operating Pressure	0.5 Bar
No. Outlets	2.0000
Outlet Elbow Supplied	No

© ROXOR Group