Sales Code: CSB105BCO **Barcode:** 5056462639956 **Brand:** BC Designs **Description:** Victrion Traditional Slide Rail Kit and Handset

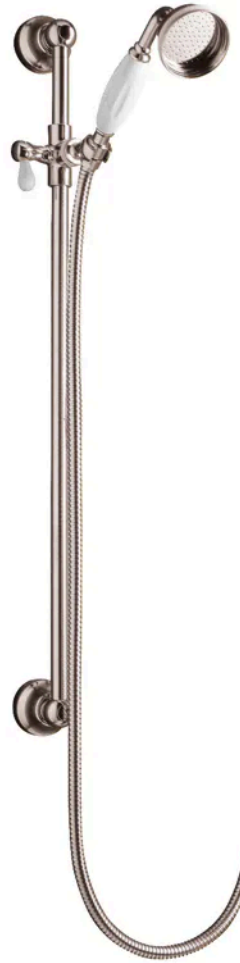

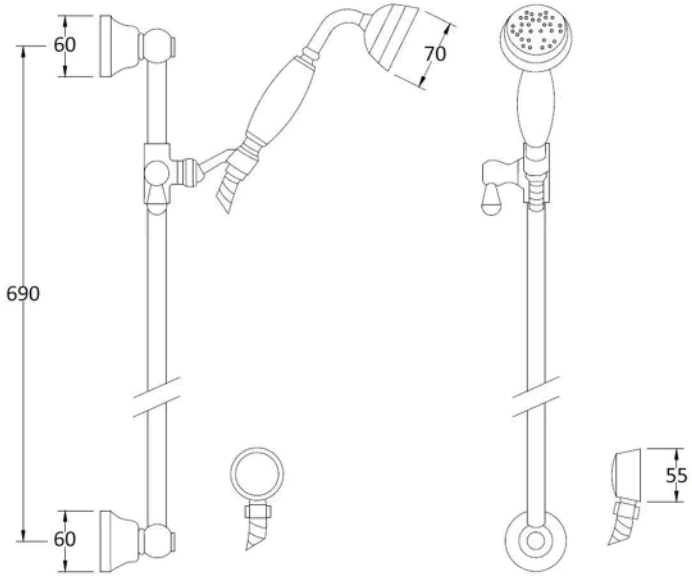

Product Dimensions

Product	750 x 70 x 150mm (H x W x D)
Packaged	80 x 125 x 785mm (H x W x D)
Nett Weight	1.5 kg
Packaged Weight	1.97 kg

Product Details

Country of Origin	China
Product Material	Brass
Control Type	Not Applicable
Colour/Finish	Brushed Copper
Style	Traditional
Min Operating Pressure	0.1 Bar

© ROXOR Group