Sales Code: CSA030BCO **Barcode:** 5056462639871 **Brand:** BC Designs **Description:** Victrion Two Outlet Triple Thermostatic Concealed Valve

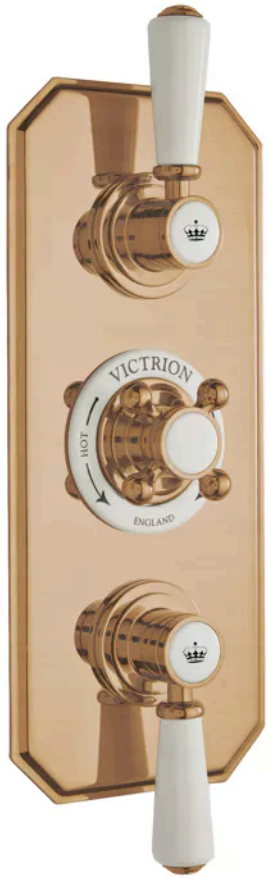

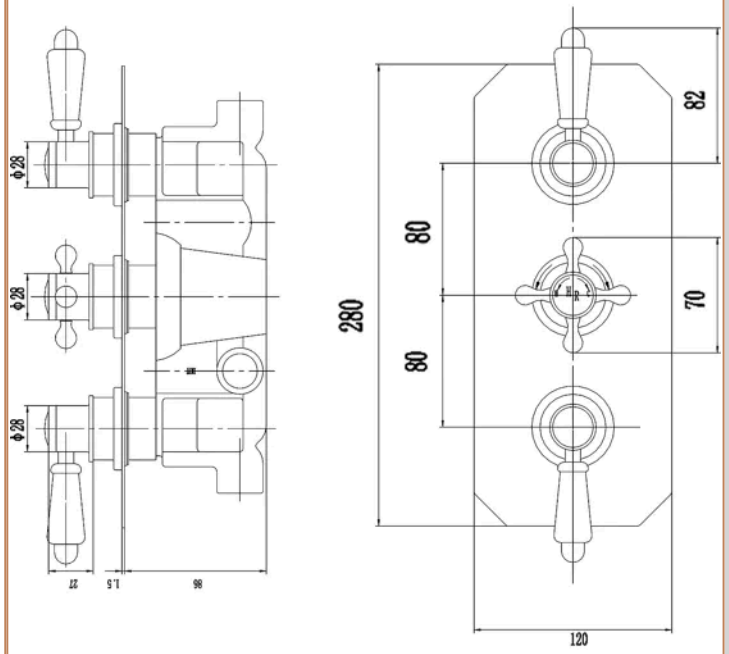

Product Dimensions

Product	320 x 120 x 135mm (H x W x D)
Packaged	110 x 250 x 320mm (H x W x D)
Outer Box	370 x 530 x 345mm (H x W x D)
Nett Weight	3 kg
Packaged Weight	3.4 kg

Packaging Details

Label Size (mm)	50 x 100
Label Colour	White
Label Qty	1.0000

Product Details

Country of Origin	China
Product Material	Brass Abs
Control Type	Manual
WRAS Approved	Yes
Valve/Cartridge Type	1/4 Turn
Colour/Finish	Copper
Mount Type	Recessed/Wall
Style	Traditional
Handle Type	Crosshead/Lever
TMV2 Approved	Yes
TMV3 Approved	No
Pipe Size	22 mm (3/4" BSP)
Handset Included	No
Head Included	No
Min Operating Pressure	0.1 Bar
No. Outlets	2.0000
Outlet Elbow Supplied	No
Tmv2 Approval Number	2603035
Valve / Cartridge Type	1/4 Turn
Wras Approval No	250602040

© ROXOR Group