Sales Code: CSA025G **Barcode:** 5056462639765 **Brand:** BC Designs **Description:** BC Sanitan Gold Exposed Single Outlet Twin Thermostatic Shower Valve



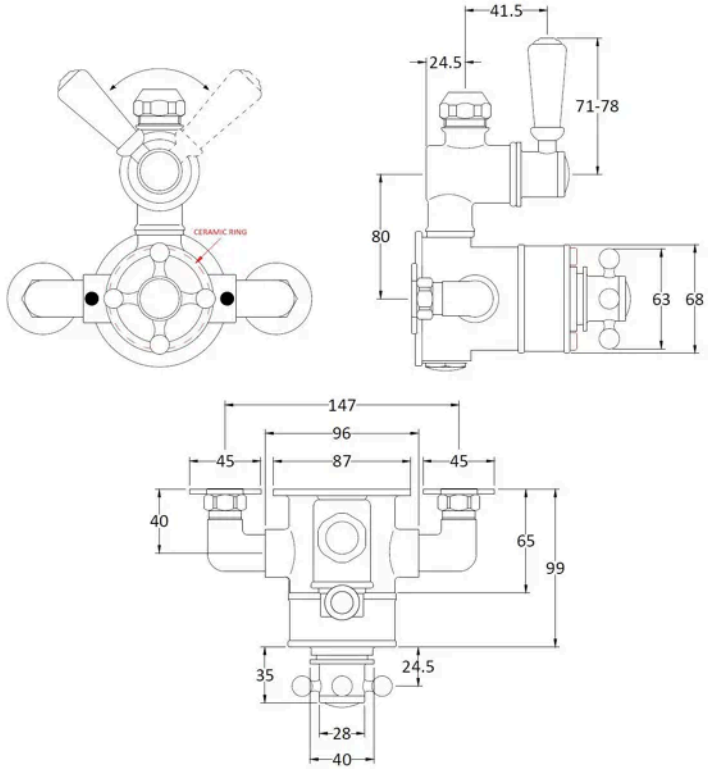

Product Dimensions

Product	206 x 195 x 135mm (H x W x D)
Packaged	170 x 215 x 245mm (H x W x D)
Outer Box	480 x 440 x 520mm (H x W x D)
Nett Weight	2.5 kg
Packaged Weight	3 kg

Packaging Details

Label Size (mm)	50 x 100
Label Colour	White
Label Qty	1.0000

Product Details

Country of Origin	China
Product Material	Brass
Control Type	Manual
WRAS Approved	No
Valve/Cartridge Type	1/4 Turn
Colour/Finish	Chrome
Mount Type	Wall Hung
Style	Traditional
Handle Type	Crosshead/Lever
TMV2 Approved	No
TMV3 Approved	No
Pipe Centres	150
Handset Included	No
Head Included	No
Min Operating Pressure	0.1 Bar
No. Outlets	1.0000
Valve / Cartridge Type	1/4 Turn

© ROXOR Group