**Sales Code:** CSA020BC

**Barcode:** 5056462639673

**Brand:** BC Designs

**Description:** BC Sanitan Brushed Chrome Concealed Single Outlet Twin Thermostatic Shower Valve




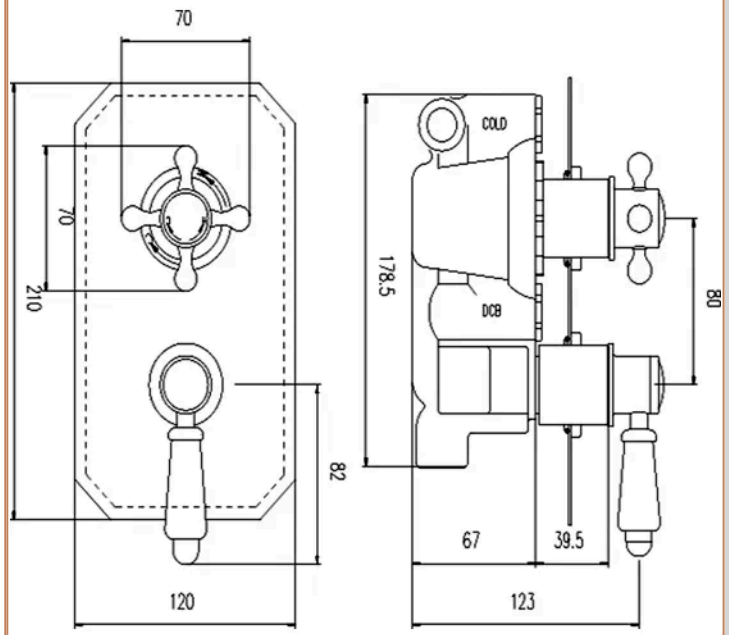


## Product Dimensions

| | |
|---|---|
| Product | 230 x 120 x 135mm (H x W x D) |
| Packaged | 110 x 240 x 250mm (H x W x D) |
| Outer Box | 325 x 490 x 290mm (H x W x D) |
| Nett Weight | 2.8 kg |
| Packaged Weight | 3 kg |

## Packaging Details

| | |
|---|---|
| Label Size (mm) | 50 x 100 |
| Label Colour | White |
| Label Qty | 1.0000 |

## Product Details

| | |
|---|---|
| Country of Origin | China |
| Product Material | Brass Abs |
| Control Type | Manual |
| WRAS Approved | Yes |
| Valve/Cartridge Type | 1/4 Turn |
| Colour/Finish | Brushed Chrome |
| Mount Type | Recessed/Wall |
| Style | Traditional |
| Handle Type | Crosshead/Lever |
| TMV2 Approved | Yes |
| TMV3 Approved | No |
| Handset Included | No |
| Head Included | No |
| Min Operating Pressure | 0.1 Bar |
| No. Outlets | 1.0000 |
| Outlet Elbow Supplied | No |
| Tmv2 Approval Number | 2603035 |
| Valve / Cartridge Type | 1/4 Turn |
| Wras Approval No | 250602040 |

© ROXOR Group