Sales Code: CRE196 **Barcode:** 5056678463017 **Brand:** BC Designs **Description:** BC Designs Crestfield 800mm Nimbus White Wall Hung Vanity Unit



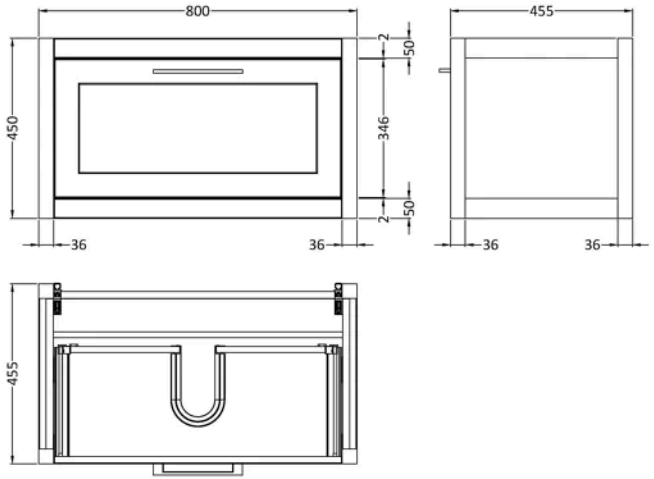

Product Dimensions

Product	450 x 800 x 455mm (H x W x D)
Packaged	470 x 820 x 475mm (H x W x D)
Nett Weight	23.5 kg
Packaged Weight	24.3 kg

Packaging Details

Box Qty	1

Product Details

Country of Origin	China
Product Material	Mdf Vinyl Smooth Matt
Colour/Finish	Nimbus White
Mount Type	Wall Hung
Style	Traditional
Construction Method	Cam & Wood Dowel
Construction Type	Rigid
Drawer Type	80mm High Metal S/C Inc Gallery
Fascia Finish	Mdf Vinyl Smooth Matt
Fsc Certified	Yes
Handles Included	Yes
Material Thickness	18 mm

© ROXOR Group