Sales Code: CPC027 **Barcode:** 5055275895719 **Brand:** Hudson Reed **Description:** Hudson Reed Arlo Flush to Wall Compact Toilet With Seat



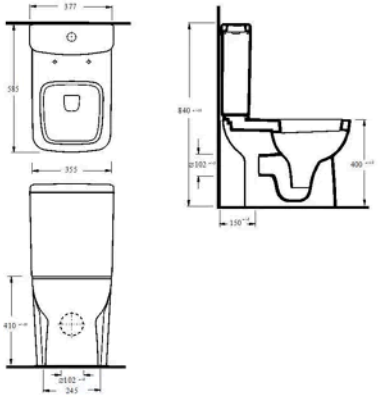

Product Dimensions

Product	845 x 380 x 585mm (H x W x D)
Packaged	550 x 550 x 550mm (H x W x D)
Nett Weight	43.63 kg
Packaged Weight	43.63 kg

Product Details

Country of Origin	Turkey
Product Material	Vitreous China
Colour/Finish	Gloss White
Style	Contemporary
Ce Certified	Yes
Includes Seat	Yes
Pan Type	Flush To Wall

© ROXOR Group

Sales Code: NCB500 **Barcode:** 5055369063208 **Brand:** Hudson Reed **Description:** Hudson Reed Arlo Close Coupled Pan



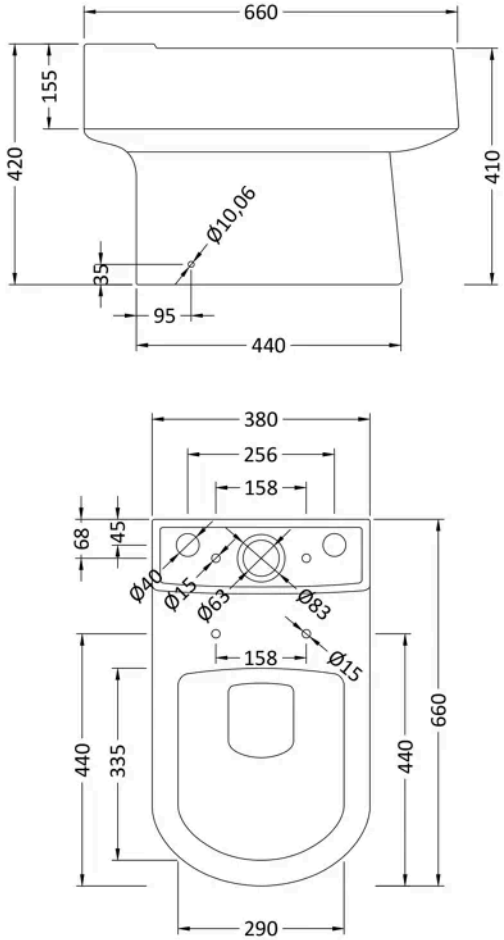

Product Dimensions

Packaged	700 x 440 x 440mm (H x W x D)
Nett Weight	26.7 kg
Packaged Weight	26.7 kg

Product Details

Country of Origin	Turkey
Ce Certified	Yes

© ROXOR Group

Sales Code: NCB501 **Barcode:** 5055369063192 **Brand:** Hudson Reed **Description:** Close Coupled Short Projection Cistern & Fittings



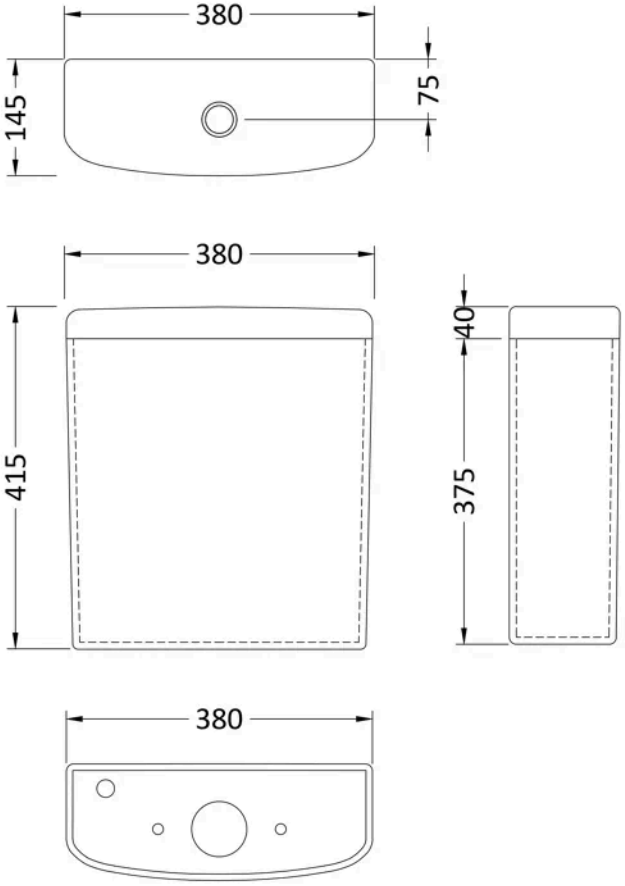

Product Dimensions

Product	415 x 380 x 145mm (H x W x D)
Packaged	475 x 380 x 185mm (H x W x D)
Nett Weight	14 kg
Packaged Weight	14.2 kg

Product Details

Country of Origin	Turkey
Product Material	Vitreous China
Colour/Finish	White
Style	Contemporary
Ce Certified	Yes

© ROXOR Group

Sales Code: NCB699 **Barcode:** 5055369063215 **Brand:** Hudson Reed **Description:** Ambrose White Square Soft Close Toilet Seat With Top Fix Hinge



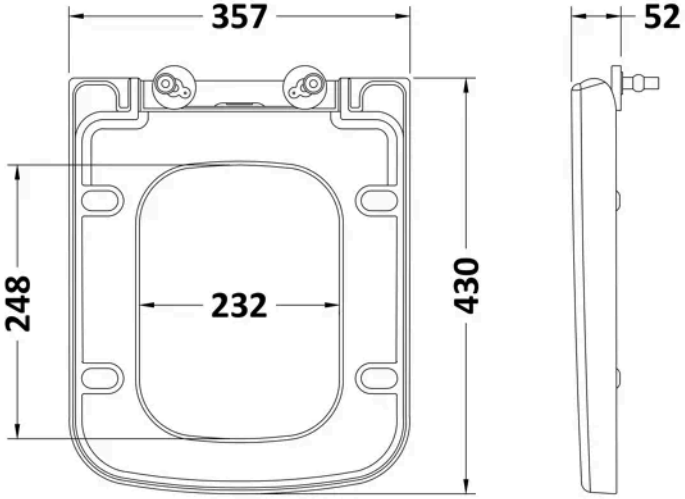

Product Dimensions

Product	52 x 355 x 390mm (H x W x D)
Packaged	60 x 377 x 445mm (H x W x D)
Outer Box	685mm (H)
Nett Weight	2 kg
Packaged Weight	2.73 kg

Packaging Details

Label Size (mm)	50 x 100
Label Qty	1.0000

Product Details

Country of Origin	Turkey
Product Material	Polypropylene
Colour/Finish	White
Fixings Included	Yes
Ce Certified	No
Hinge Centres (Max)	113 mm
Toilet Seat Function	Soft Close
Toilet Seat Hinge Type	Top Fix
Toilet Seat Type	Square

© ROXOR Group