Sales Code: CPC025 **Barcode:** 5055275888155 **Brand:** Hudson Reed **Description:** Hudson Reed Arlo 1 Tap Hole 550mm Ceramic Basin & Pedestal



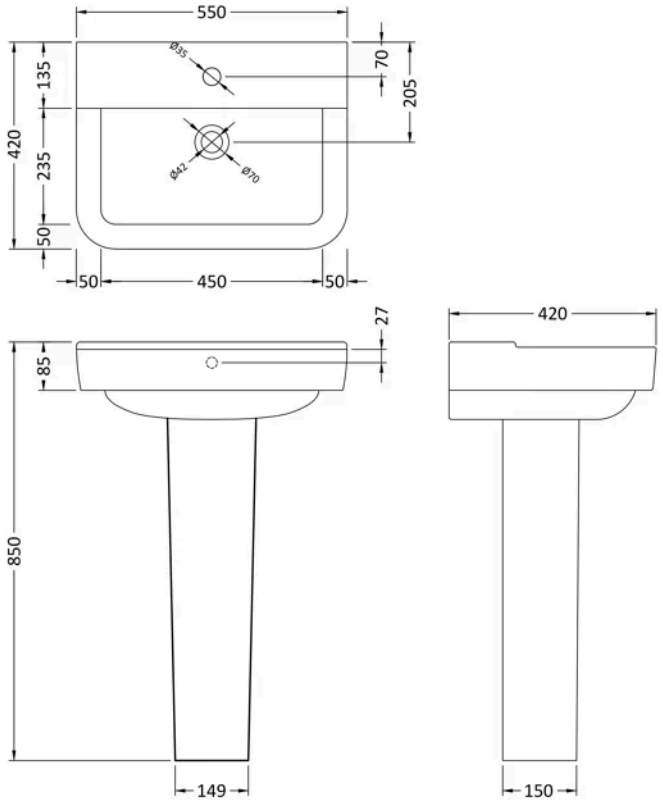

Product Dimensions

Product	850 x 550 x 420mm (H x W x D)
Nett Weight	27.94 kg
Packaged Weight	27.94 kg

Packaging Details

Box Qty	2

Product Details

Country of Origin	China
Product Material	Vitreous China
Colour/Finish	White
Style	Contemporary
Fixings Included	Yes
Ce Certified	Yes
Inner Bowl Depth	240 mm
Inner Bowl Height	125 mm
Inner Bowl Width	450 mm
No. Of Tapholes	1
Number Of Bowls	1
Overflow Cover Included	Yes
Overflow Included	Yes
Tap Included	No
Waste Included	No

© ROXOR Group

Sales Code: NCU503 **Barcode:** 5055369030828 **Brand:** Hudson Reed **Description:** Hudson Reed Arlo White Contemporary Full Pedestal



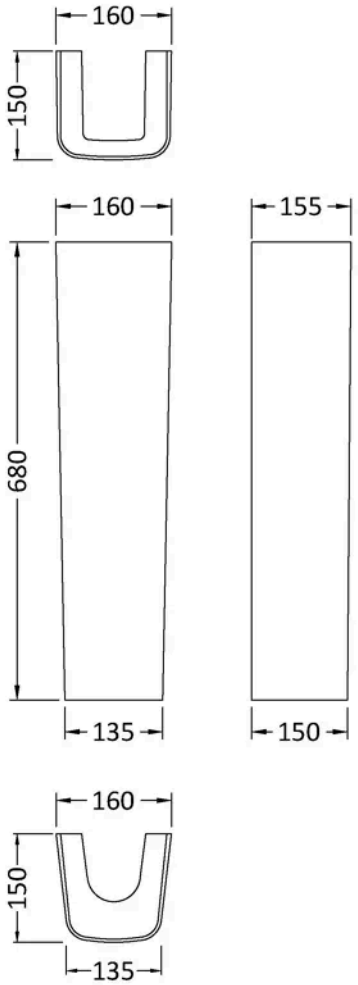

Product Dimensions

Packaged	205 x 205 x 670mm (H x W x D)
Nett Weight	11.25 kg
Packaged Weight	11.94 kg

Packaging Details

Box Qty	1

Product Details

Country of Origin	Turkey
Colour/Finish	White
Ce Certified	Yes

© ROXOR Group

Sales Code: NCU704 **Barcode:** 5055369069880 **Brand:** Hudson Reed **Description:** Hudson Reed Arlo 1 Tap Hole 550mm Ceramic Basin



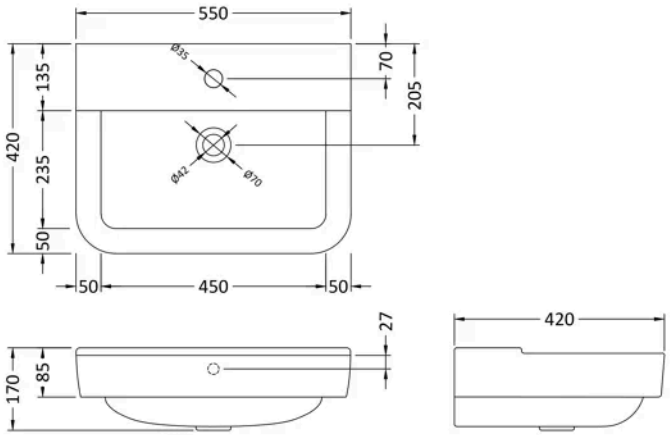

Product Dimensions

Packaged	580 x 480 x 190mm (H x W x D)
Nett Weight	16 kg
Packaged Weight	16 kg

Packaging Details

Box Qty	1

Product Details

Country of Origin	Turkey
Product Material	Vitreous China
Colour/Finish	White
Ce Certified	Yes
Inner Bowl Height	125 mm
No. Of Tapholes	1
Number Of Bowls	1

© ROXOR Group