Sales Code: CPC001 **Barcode:** 5055369031511 **Brand:** Hudson Reed **Description:** Hudson Reed Arlo Flush to Wall Toilet With Cistern & Seat



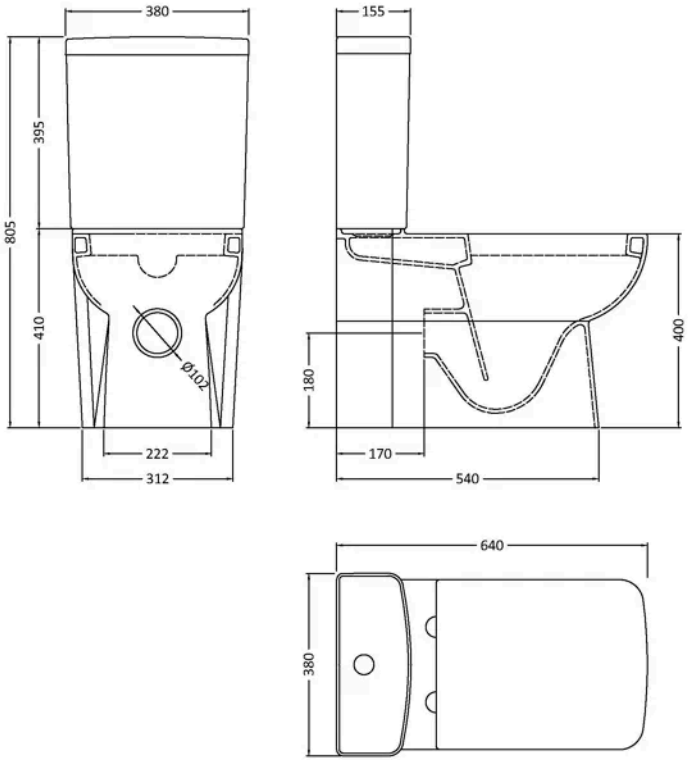

Product Dimensions

Product	805 x 380 x 640mm (H x W x D)
Packaged	550 x 550 x 550mm (H x W x D)
Nett Weight	45.95 kg
Packaged Weight	45.95 kg

Product Details

Country of Origin	United Kingdom
Product Material	Vitreous China
Colour/Finish	Gloss White
Style	Contemporary
Ce Certified	Yes
Includes Seat	Yes
Pan Type	Flush To Wall

© ROXOR Group

Sales Code: NCU700 **Barcode:** 5055369030972 **Brand:** Hudson Reed **Description:** Hudson Reed Arlo Back to Wall Toilet Pan



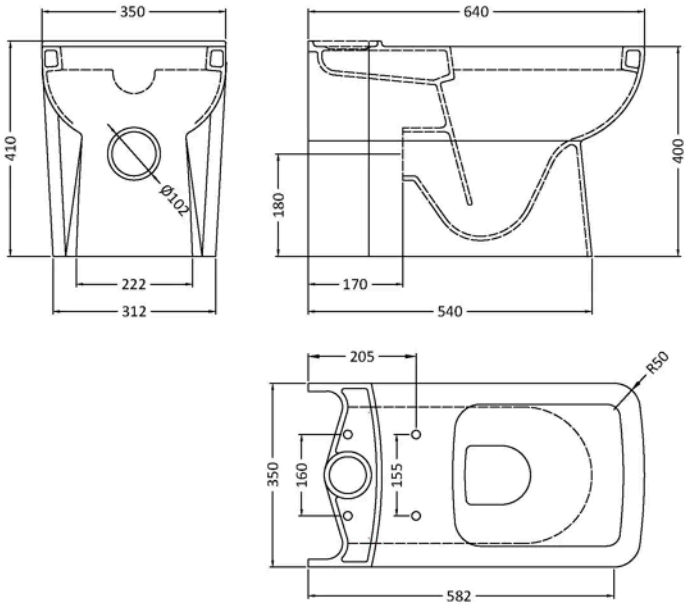

Product Dimensions

Packaged	430 x 370 x 710mm (H x W x D)
Nett Weight	27 kg
Packaged Weight	29.2 kg

Product Details

Country of Origin	Turkey
Ce Certified	Yes

© ROXOR Group

Sales Code: NCU701 **Barcode:** 5055369030989 **Brand:** Hudson Reed **Description:** Hudson Reed Arlo Compact Close Coupled Cistern



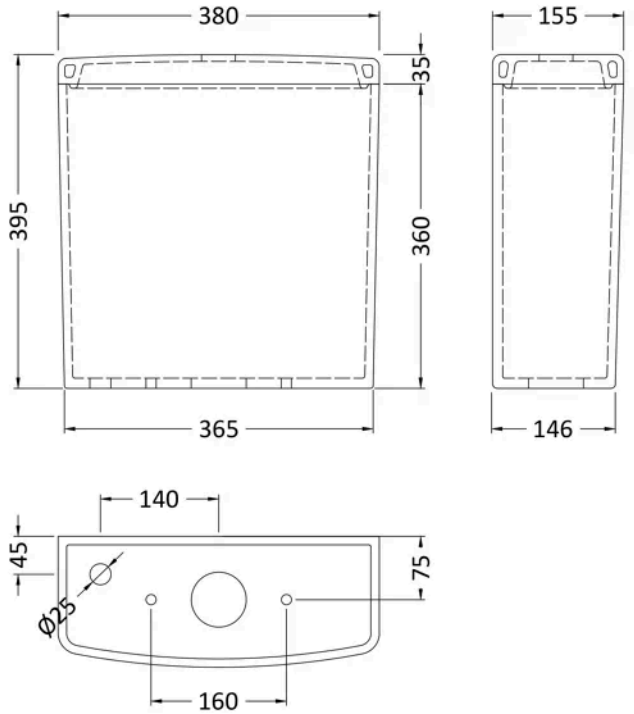

Product Dimensions

Packaged	385 x 480 x 185mm (H x W x D)
Nett Weight	14 kg
Packaged Weight	14 kg

Product Details

Country of Origin	Turkey
Ce Certified	Yes

© ROXOR Group

Sales Code: NCU799 **Barcode:** 5055369030996 **Brand:** Hudson Reed **Description:** Hudson Reed Arlo White Square Soft Close Toilet Seat With Top Fix Hinge



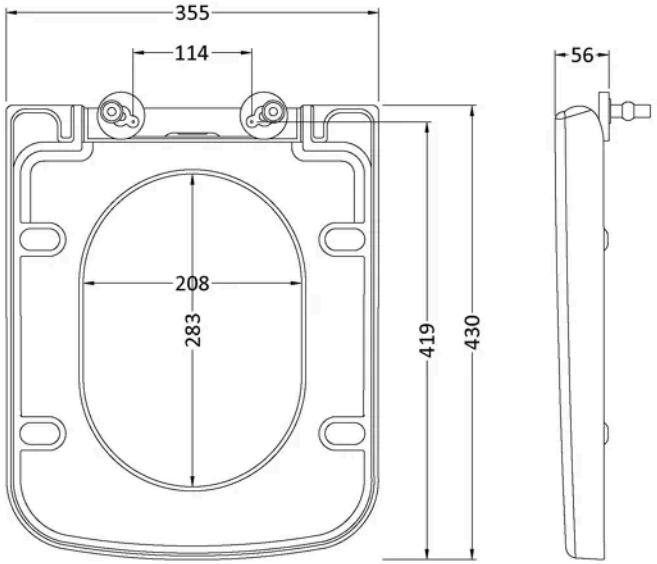

Product Dimensions

Product	56 x 355mm (H x W)
Packaged	50 x 500 x 365mm (H x W x D)
Outer Box	480mm (H)
Nett Weight	2.5 kg
Packaged Weight	2.75 kg

Packaging Details

Label Size (mm)	50 x 100
Label Qty	1.0000

Product Details

Country of Origin	Turkey
Product Material	Polypropylene
Colour/Finish	White
Style	Contemporary
Fixings Included	Yes
Hinge Centres (Max)	186 mm
Hinge Centres (Min)	150 mm
Toilet Seat Function	Soft Close
Toilet Seat Hinge Type	Top Fix
Toilet Seat Type	Square

© ROXOR Group