Sales Code: COR10533 **Barcode:** 5056462636771 **Brand:** nuie **Description:** nuie Core Gloss White 600mm 2 Door Wall Hung Vanity Unit With Basin



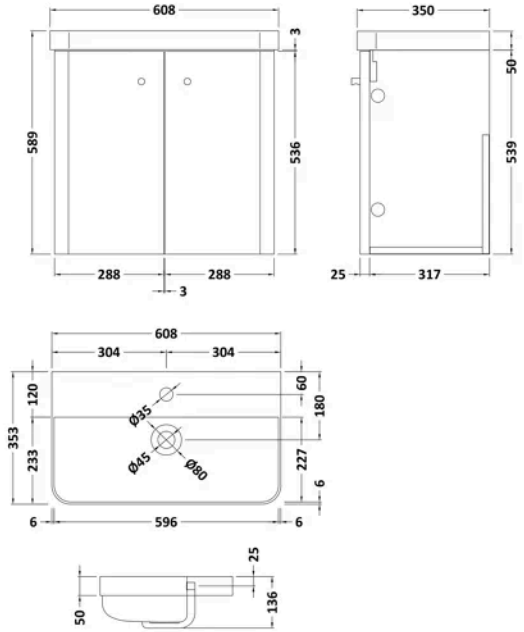

Product Dimensions

Product	539 x 579 x 342mm (H x W x D)
Packaged	550 x 550 x 550mm (H x W x D)
Nett Weight	31.4 kg
Packaged Weight	31.9 kg

Packaging Details

Box Qty	4

Product Details

Country of Origin	China
Product Material	Mfc Painted Gloss
Colour/Finish	Gloss White
Mount Type	Wall Hung
Style	Contemporary
Construction Method	Cam & Wood Dowel
Construction Type	Rigid
Fascia Finish	Mdf Painted Gloss
Handles Included	Yes
Inner Bowl Height	86 mm
Material Thickness	16 mm
No. Doors	2
No. Of Tapholes	1
Number Of Bowls	1
Overflow Included	Yes
Tap Included	No

© ROXOR Group

Sales Code: H010 **Barcode:** 5056211899082 **Brand:** nuie **Description:** 96mm Chrome Knurled Bar Handle



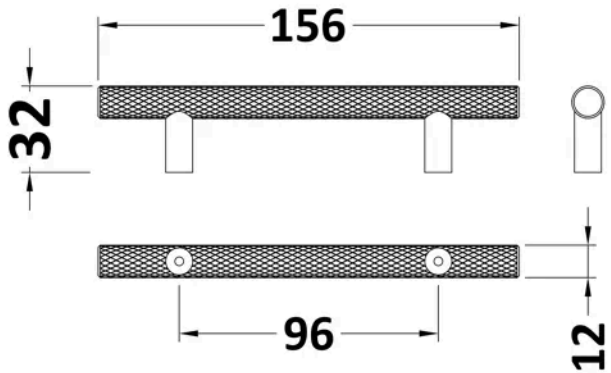

Product Dimensions

Product	156 x 12 x 32mm (H x W x D)
Packaged	20 x 50 x 290mm (H x W x D)
Nett Weight	2.2 kg
Packaged Weight	2.2 kg

Packaging Details

Box Qty	1
Label Size (mm)	50 x 100
Label Colour	White
Label Qty	1.0000

Product Details

Country of Origin	China
Product Material	Brass
Colour/Finish	Chrome
Style	Contemporary
Handle Type	Bar Handle
Fixings Included	Yes
Product Diameter	16 mm

© ROXOR Group

Sales Code: RC004 **Barcode:** 5056211853404 **Brand:** nuie **Description:** nuie Core 600mm 1 Tap Hole Ceramic Thin Edge Basin



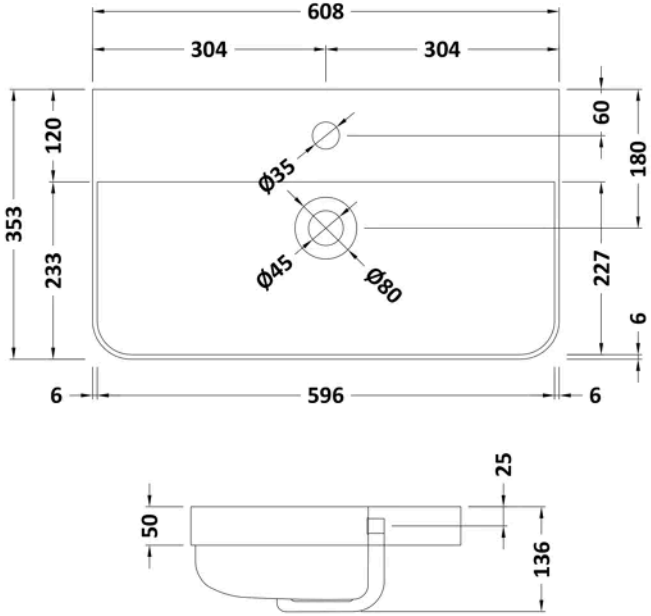

Product Dimensions

Product	135 x 605 x 355mm (H x W x D)
Packaged	415 x 640 x 210mm (H x W x D)
Nett Weight	10 kg
Packaged Weight	10.5 kg

Packaging Details

Box Qty	1

Product Details

Country of Origin	China
Product Material	Vitreous China
Colour/Finish	White
Ce Certified	Yes
Inner Bowl Height	86 mm
No. Of Tapholes	1
Number Of Bowls	1

© ROXOR Group

Sales Code: RC0154 **Barcode:** 5056211853374 **Brand:** nuie **Description:** nuie core 600mm Gloss White 2 Door Wall Hung Vanity Unit



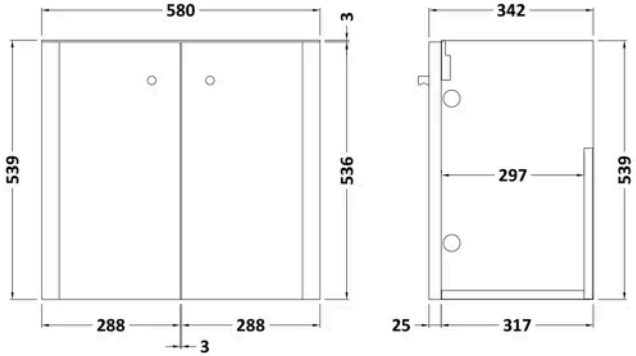

Product Dimensions

Product	539 x 580 x 342mm (H x W x D)
Packaged	560 x 600 x 340mm (H x W x D)
Nett Weight	17.5 kg
Packaged Weight	18 kg

Packaging Details

Box Qty	1

Product Details

Country of Origin	China
Product Material	Mdf Painted Gloss
Colour/Finish	Gloss White
Mount Type	Wall Hung
Style	Contemporary
Construction Method	Cam & Wood Dowel
Construction Type	Rigid
Fascia Finish	Mdf Painted Gloss
Handles Included	Yes
Material Thickness	18 mm
No. Doors	2
No. Shelves	1
Number Of Shelves	1

© ROXOR Group