Sales Code: COR10317 **Barcode:** 5056462644516 **Brand:** nuie **Description:** nuie Core Gloss White 500mm 2 Door Wall Hung Vanity Unit With Basin



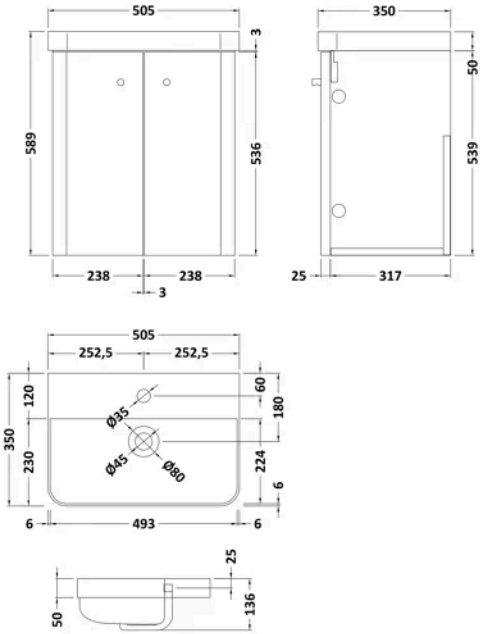

Product Dimensions

Product	539 x 479 x 342mm (H x W x D)
Packaged	550 x 550 x 550mm (H x W x D)
Nett Weight	25.86 kg
Packaged Weight	0.01 kg

Packaging Details

Box Qty	4

Product Details

Country of Origin	China
Product Material	Mfc Painted Gloss,Vitreous China,Zamac
Colour/Finish	Gloss White
Mount Type	Wall Hung
Style	Contemporary
Construction Method	Cam & Wood Dowel
Construction Type	Rigid
Fascia Finish	Mdf Painted Gloss
Handles Included	Yes
Inner Bowl Height	86 mm
Material Thickness	16 mm
No. Doors	2
No. Of Tapholes	1
Number Of Bowls	1
Overflow Included	Yes
Tap Included	No

© ROXOR Group

Sales Code: H205 **Barcode:** 5056211899884 **Brand:** nuie **Description:** 160mm Black D Handle



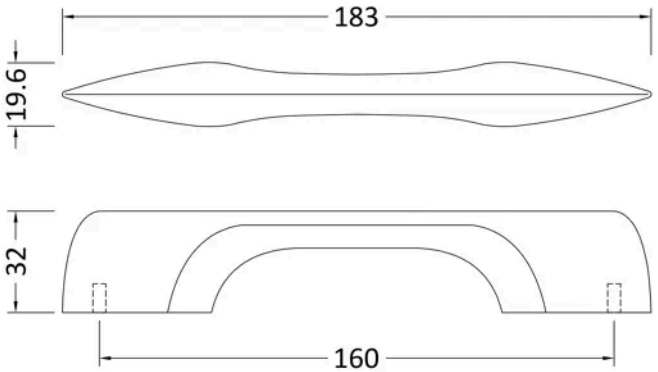

Product Dimensions

Product	20 x 183 x 32mm (H x W x D)
Packaged	31 x 20 x 30mm (H x W x D)
Nett Weight	0.18 kg
Packaged Weight	0.18 kg

Packaging Details

Box Qty	1
Label Size (mm)	50 x 100
Label Colour	White
Label Qty	1.0000

Product Details

Country of Origin	Turkey
Product Material	Zamac
Colour/Finish	Black
Style	Contemporary
Handle Type	D Shape
Fixings Included	Yes
Product Diameter	20 mm

© ROXOR Group

Sales Code: RC003 **Barcode:** 5056211853398 **Brand:** nuie **Description:** nuie Core 500mm 1 Tap Hole Ceramic Thin Edge Basin



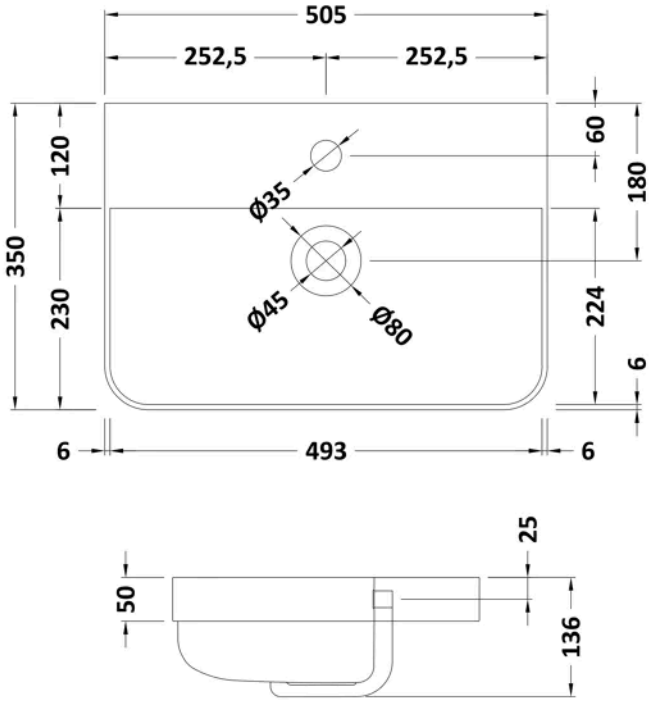

Product Dimensions

Product	135 x 505 x 355mm (H x W x D)
Packaged	415 x 540 x 210mm (H x W x D)
Nett Weight	10 kg
Packaged Weight	10.5 kg

Packaging Details

Box Qty	1

Product Details

Country of Origin	China
Product Material	Vitreous China
Colour/Finish	White
Ce Certified	Yes
Inner Bowl Height	86 mm
No. Of Tapholes	1
Number Of Bowls	1

© ROXOR Group

Sales Code: RC0153 **Barcode:** 5056211853350 **Brand:** nuie **Description:** nuie core 500mm Gloss White 2 Door Wall Hung Vanity Unit



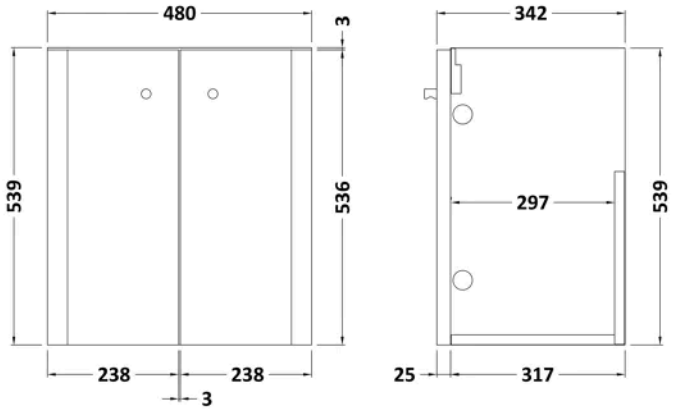

Product Dimensions

Product	539 x 479 x 342mm (H x W x D)
Packaged	560 x 500 x 340mm (H x W x D)
Nett Weight	15.5 kg
Packaged Weight	16 kg

Packaging Details

Box Qty	1

Product Details

Country of Origin	China
Product Material	Mdf Painted Gloss
Colour/Finish	Gloss White
Mount Type	Wall Hung
Style	Contemporary
Construction Method	Cam & Wood Dowel
Construction Type	Rigid
Fascia Finish	Mdf Painted Gloss
Handles Included	Yes
Material Thickness	18 mm
No. Doors	2
No. Shelves	1
Number Of Shelves	1

© ROXOR Group