Sales Code: COR1015 **Barcode:** 5056462636535 **Brand:** nuie **Description:** nuie Core Gloss White 400mm 1 Door Wall Hung Vanity Unit With Basin



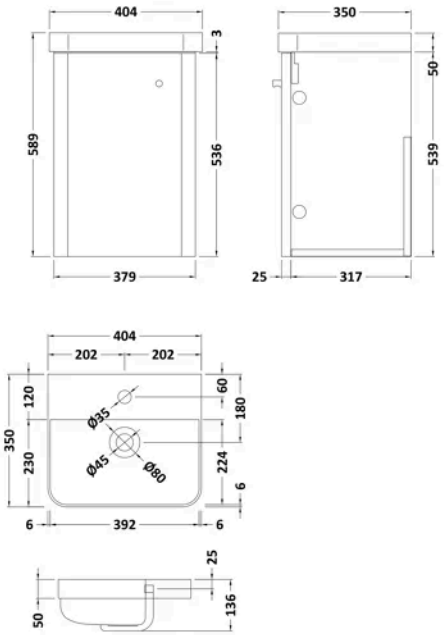

Product Dimensions

Product	539 x 379 x 342mm (H x W x D)
Packaged	550 x 550 x 550mm (H x W x D)
Nett Weight	22.54 kg
Packaged Weight	23.04 kg

Packaging Details

Box Qty	3

Product Details

Country of Origin	China
Product Material	Mfc Painted Gloss
Colour/Finish	Gloss White
Mount Type	Wall Hung
Style	Contemporary
Construction Method	Cam & Wood Dowel
Construction Type	Rigid
Fascia Finish	Mdf Painted Gloss
Handles Included	Yes
Inner Bowl Height	86 mm
Material Thickness	16 mm
No. Doors	1
No. Of Tapholes	1
Number Of Bowls	1
Overflow Included	Yes
Tap Included	No

© ROXOR Group

Sales Code: H213 **Barcode:** 5056211899068 **Brand:** nuie **Description:** Round Black Knob



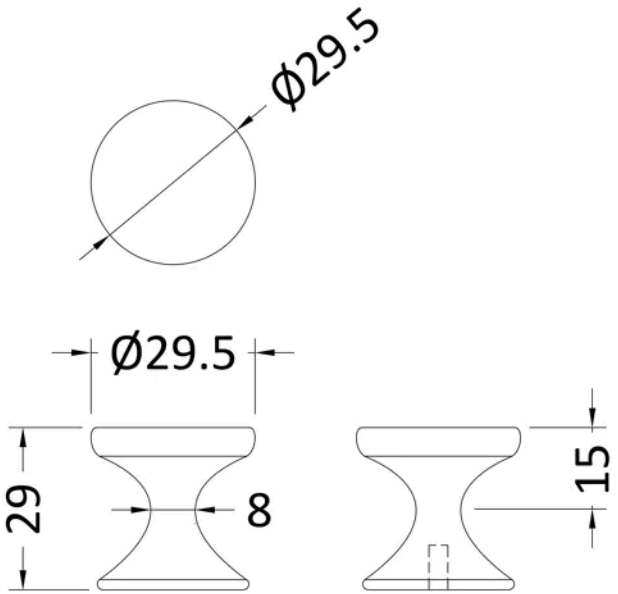

Product Dimensions

Product	30 x 30 x 29mm (H x W x D)
Packaged	50 x 50 x 50mm (H x W x D)
Nett Weight	0.04 kg
Packaged Weight	0.04 kg

Packaging Details

Box Qty	1
Label Size (mm)	50 x 100
Label Colour	White
Label Qty	1.0000

Product Details

Country of Origin	Turkey
Product Material	Zamac
Colour/Finish	Black
Style	Contemporary
Handle Type	Round
Fixings Included	Yes
Product Diameter	30 mm

© ROXOR Group

Sales Code: RC002 **Barcode:** 5056211853381 **Brand:** nuie **Description:** nuie Core 400mm 1 Tap Hole Ceramic Thin Edge Basin



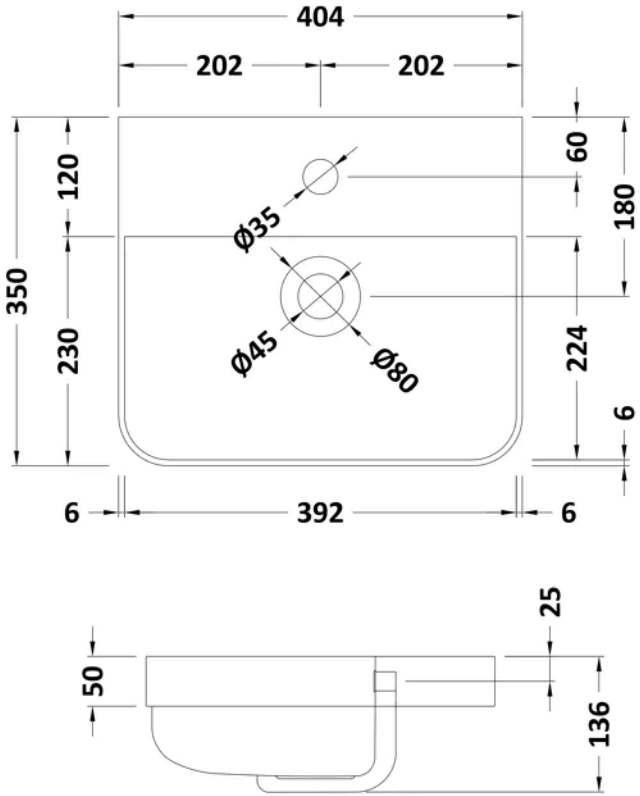

Product Dimensions

Product	135 x 405 x 355mm (H x W x D)
Packaged	415 x 440 x 210mm (H x W x D)
Nett Weight	9.5 kg
Packaged Weight	10 kg

Packaging Details

Box Qty	1

Product Details

Country of Origin	China
Product Material	Vitreous China
Colour/Finish	White
Ce Certified	Yes
Inner Bowl Height	86 mm
No. Of Tapholes	1
Number Of Bowls	1

© ROXOR Group

Sales Code: RC0152 **Barcode:** 5056211853336 **Brand:** nuie **Description:** nuie core 400mm Gloss White 1-Door Wall Hung Vanity Unit



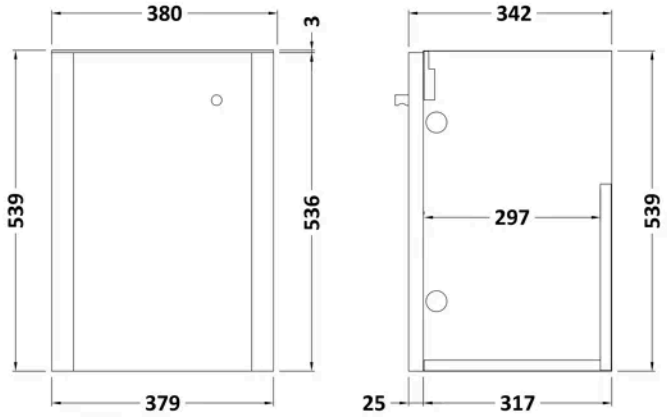

Product Dimensions

Product	539 x 379 x 342mm (H x W x D)
Packaged	560 x 400 x 340mm (H x W x D)
Nett Weight	13.5 kg
Packaged Weight	14 kg

Packaging Details

Box Qty	1

Product Details

Country of Origin	China
Product Material	Mdf Painted Gloss
Colour/Finish	Gloss White
Mount Type	Wall Hung
Style	Contemporary
Construction Method	Cam & Wood Dowel
Construction Type	Rigid
Fascia Finish	Mdf Painted Gloss
Handles Included	Yes
Material Thickness	18 mm

© ROXOR Group