Sales Code: COR10117 **Barcode:** 5056462644455 **Brand:** nuie **Description:** nuie Core Gloss White 400mm 1 Door Wall Hung Vanity Unit With Basin



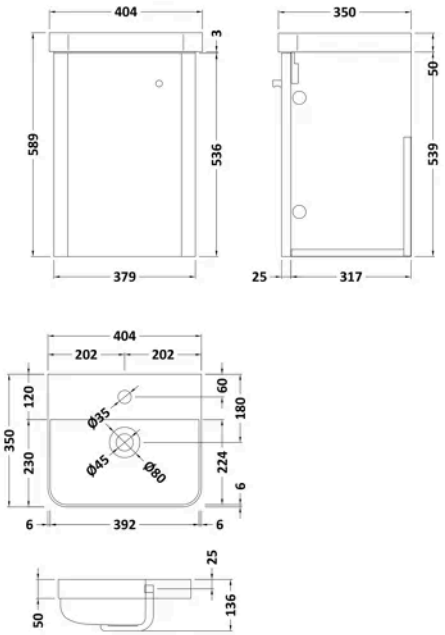

Product Dimensions

Product	539 x 379 x 342mm (H x W x D)
Packaged	550 x 550 x 550mm (H x W x D)
Nett Weight	23.18 kg
Packaged Weight	0.01 kg

Packaging Details

Box Qty	3

Product Details

Country of Origin	China
Product Material	Mfc Painted Gloss,Vitreous China,Zamac
Colour/Finish	Gloss White
Mount Type	Wall Hung
Style	Contemporary
Handle Type	D Shape
Construction Method	Cam & Wood Dowel
Construction Type	Rigid
Fascia Finish	Mdf Painted Gloss
Handle Material	Metal
Handles Included	Yes
Inner Bowl Depth	86 mm
Inner Bowl Height	86 mm
Material Thickness	16 mm
No. Doors	1
No. Of Tapholes	1
Number Of Bowls	1
Overflow Cover Included	Yes
Overflow Included	Yes
Tap Included	No
Waste Included	No

© ROXOR Group

Sales Code: H205 **Barcode:** 5056211899884 **Brand:** nuie **Description:** 160mm Black D Handle



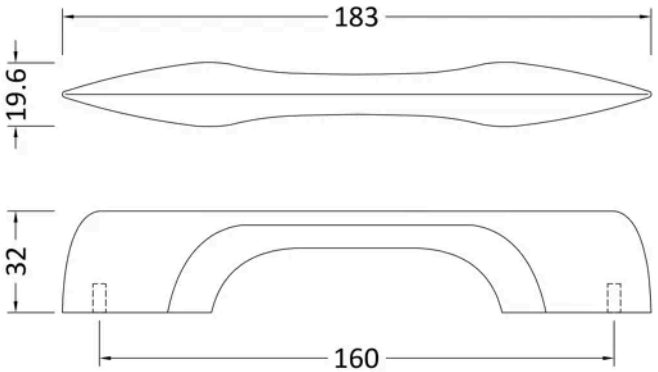

Product Dimensions

Product	20 x 183 x 32mm (H x W x D)
Packaged	31 x 20 x 30mm (H x W x D)
Nett Weight	0.18 kg
Packaged Weight	0.18 kg

Packaging Details

Box Qty	1
Label Size (mm)	50 x 100
Label Colour	White
Label Qty	1.0000

Product Details

Country of Origin	Turkey
Product Material	Zamac
Colour/Finish	Black
Style	Contemporary
Handle Type	D Shape
Fixings Included	Yes
Product Diameter	20 mm

© ROXOR Group

Sales Code: RC002 **Barcode:** 5056211853381 **Brand:** nuie **Description:** nuie Core 400mm 1 Tap Hole Ceramic Thin Edge Basin



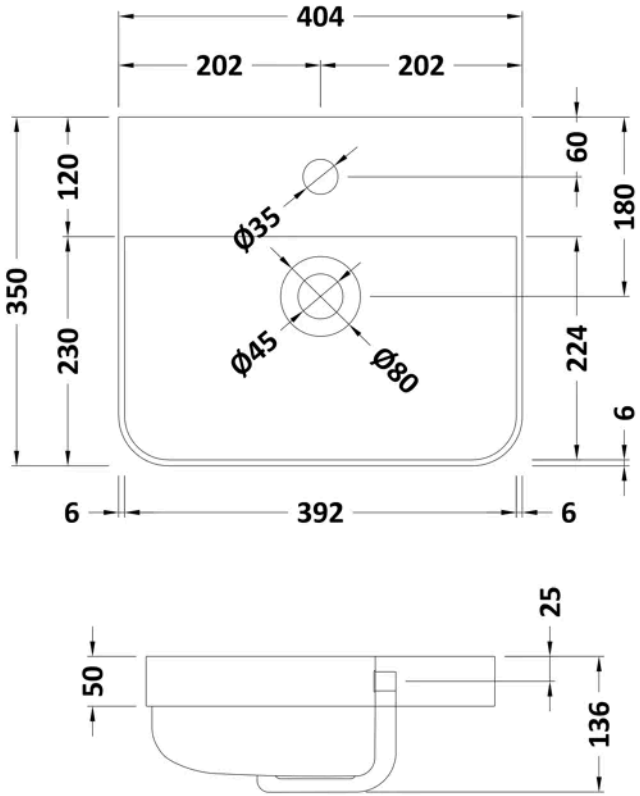

Product Dimensions

Product	135 x 405 x 355mm (H x W x D)
Packaged	415 x 440 x 210mm (H x W x D)
Nett Weight	9.5 kg
Packaged Weight	10 kg

Packaging Details

Box Qty	1

Product Details

Country of Origin	China
Product Material	Vitreous China
Colour/Finish	White
Ce Certified	Yes
Inner Bowl Height	86 mm
No. Of Tapholes	1
Number Of Bowls	1

© ROXOR Group

Sales Code: RC0152 **Barcode:** 5056211853336 **Brand:** nuie **Description:** nuie core 400mm Gloss White 1-Door Wall Hung Vanity Unit



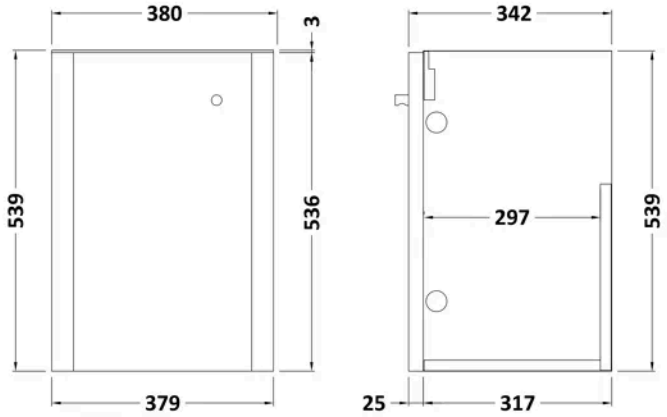

Product Dimensions

Product	539 x 379 x 342mm (H x W x D)
Packaged	560 x 400 x 340mm (H x W x D)
Nett Weight	13.5 kg
Packaged Weight	14 kg

Packaging Details

Box Qty	1

Product Details

Country of Origin	China
Product Material	Mdf Painted Gloss
Colour/Finish	Gloss White
Mount Type	Wall Hung
Style	Contemporary
Construction Method	Cam & Wood Dowel
Construction Type	Rigid
Fascia Finish	Mdf Painted Gloss
Handles Included	Yes
Material Thickness	18 mm

© ROXOR Group