Sales Code: CMA055BCO **Barcode:** 5056462643014 **Brand:** BC Designs **Description:** BC Designs Victrion Brushed Copper Double Corner Shower Basket



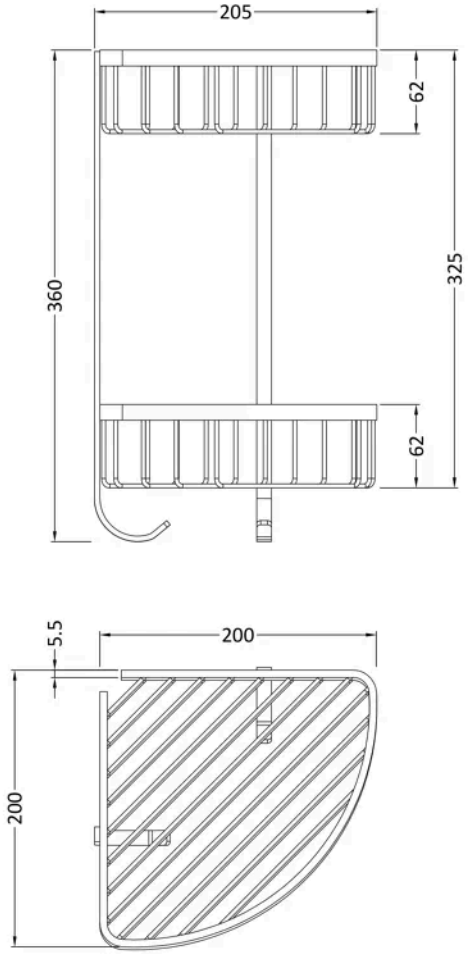

Product Dimensions

Product	360 x 200 x 200mm (H x W x D)
Packaged	140 x 160 x 265mm (H x W x D)
Nett Weight	1 kg
Packaged Weight	1.02 kg

Product Details

Country of Origin	China
Product Material	Brass
Colour/Finish	Brushed Copper
Style	Traditional

© ROXOR Group