Sales Code: CMA055BC **Barcode:** 5056462642970 **Brand:** BC Designs **Description:** BC Sanitan Brushed Chrome Double Corner Shower Basket



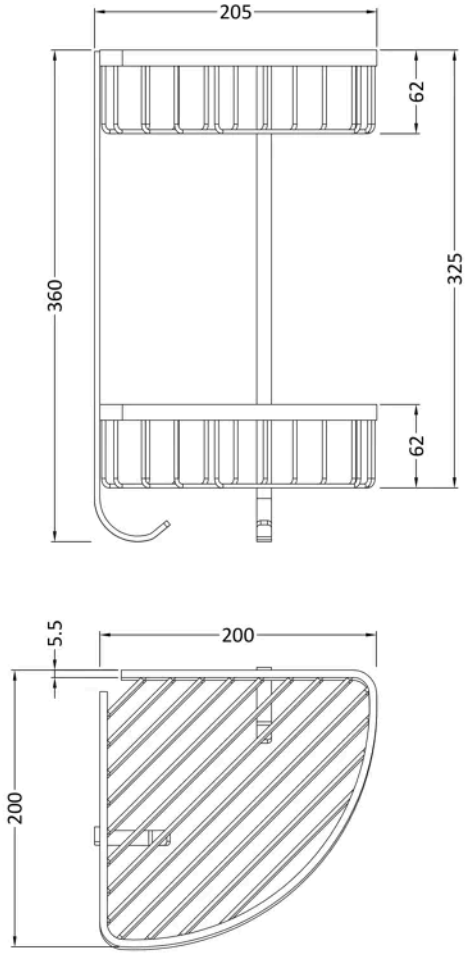

Product Dimensions

Product	360 x 200 x 200mm (H x W x D)
Packaged	140 x 160 x 265mm (H x W x D)
Nett Weight	1 kg
Packaged Weight	1.02 kg

Product Details

Country of Origin	China
Product Material	Brass
Colour/Finish	Brushed Chrome
Style	Traditional

© ROXOR Group