Sales Code: CMA055 **Barcode:** 5056462642949 **Brand:** BC Designs **Description:** BC Sanitan Chrome Double Corner Shower Basket



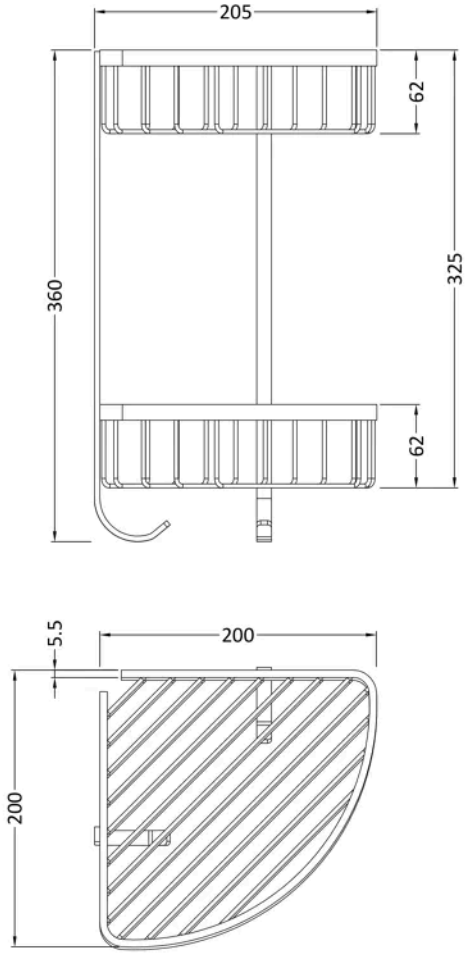

Product Dimensions

Product	360 x 200 x 200mm (H x W x D)
Packaged	140 x 160 x 265mm (H x W x D)
Nett Weight	0.9 kg
Packaged Weight	1.02 kg

Packaging Details

Label Size (mm)	50 x 100
Label Colour	White
Label Qty	2.0000

Product Details

Country of Origin	China
Product Material	Brass
Colour/Finish	Chrome
Style	Traditional
Fixings Included	Yes

© ROXOR Group