Sales Code: CMA045 **Barcode:** 5056462642789 **Brand:** BC Designs **Description:** BC Sanitan Chrome 3 Tier Towel Rack



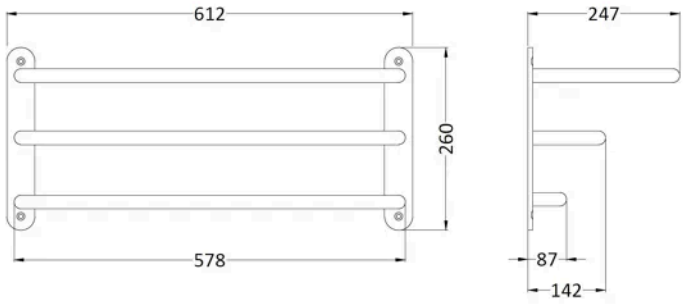

Product Dimensions

Product	260 x 612 x 247mm (H x W x D)
Packaged	625 x 58 x 269mm (H x W x D)
Nett Weight	2.3 kg
Packaged Weight	2.46 kg

Packaging Details

Label Size (mm)	50 x 100
Label Colour	White
Label Qty	2.0000

Product Details

Country of Origin	China
Product Material	Brass
Colour/Finish	Chrome
Style	Traditional
Fixings Included	Yes

© ROXOR Group