Sales Code: CMA040BN **Barcode:** 5056462642727 **Brand:** BC Designs **Description:** BC Sanitan Brushed Nickel Toilet Roll Holder



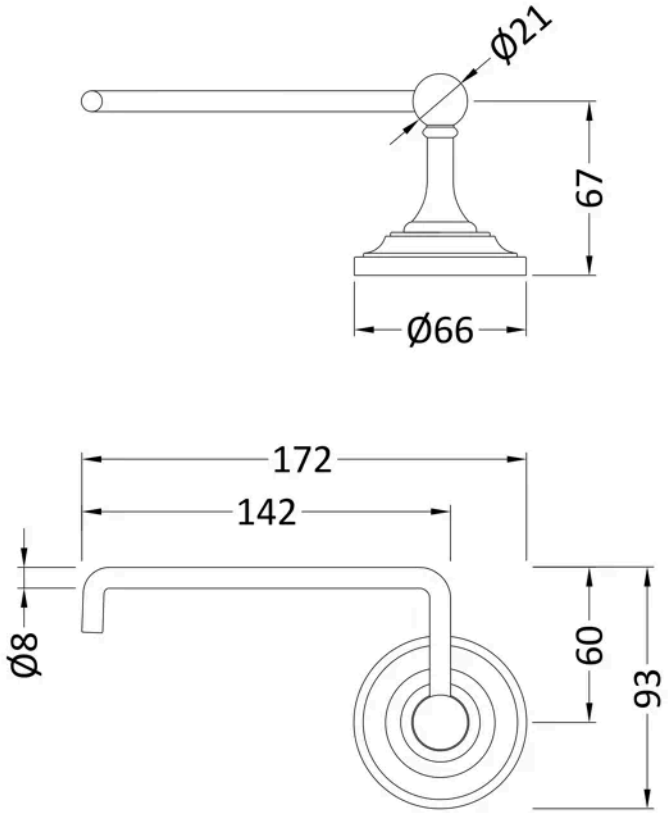

Product Dimensions

Product	93 x 172 x 67mm (H x W x D)
Packaged	95 x 110 x 190mm (H x W x D)
Nett Weight	0.3 kg
Packaged Weight	0.33 kg

Product Details

Country of Origin	China
Product Material	Brass
Colour/Finish	Brushed Nickel
Style	Traditional

© ROXOR Group