Sales Code: CMA040BC **Barcode:** 5056462642734 **Brand:** BC Designs **Description:** BC Sanitan Brushed Chrome Toilet Roll Holder



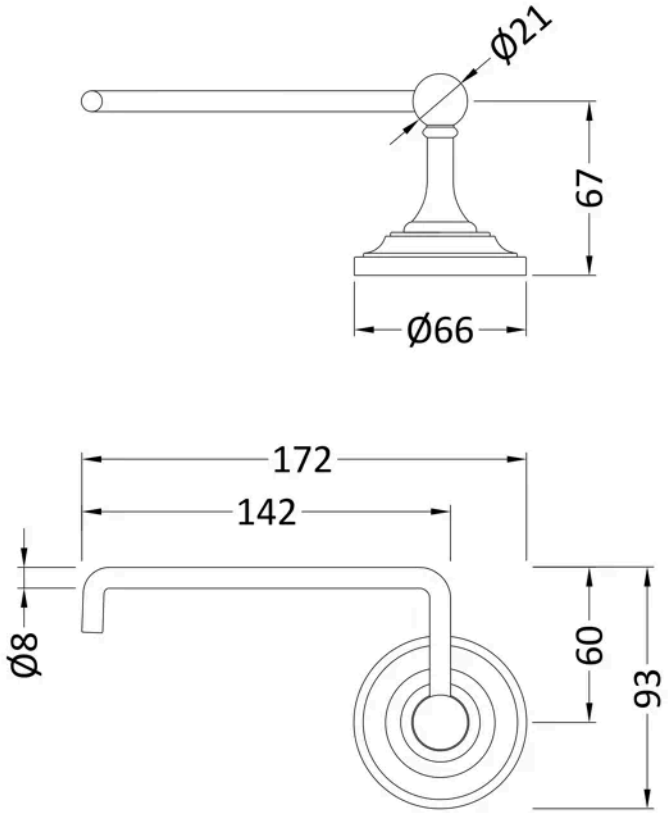

Product Dimensions

Product	93 x 172 x 67mm (H x W x D)
Packaged	95 x 110 x 190mm (H x W x D)
Nett Weight	0.3 kg
Packaged Weight	0.33 kg

Product Details

Country of Origin	China
Product Material	Brass
Colour/Finish	Brushed Chrome
Style	Traditional

© ROXOR Group