Sales Code: CMA025CO **Barcode:** 5056462642529 **Brand:** BC Designs **Description:** BC Designs Victrion Copper Double Towel Rail



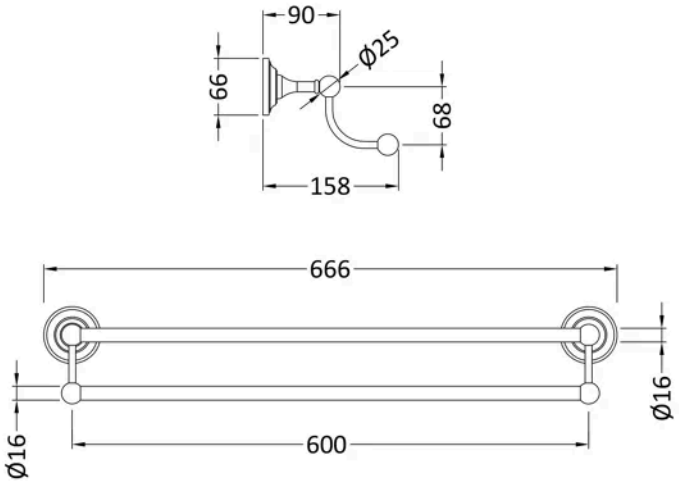

Product Dimensions

Product	66 x 666 x 158mm (H x W x D)
Packaged	75 x 105 x 620mm (H x W x D)
Nett Weight	1 kg
Packaged Weight	1 kg

Product Details

Country of Origin	China
Product Material	Brass
Colour/Finish	Copper
Style	Traditional

© ROXOR Group