Sales Code: CMA020BG **Barcode:** 5056462642437 **Brand:** BC Designs **Description:** BC Sanitan Brushed Gold Gallery Shelf

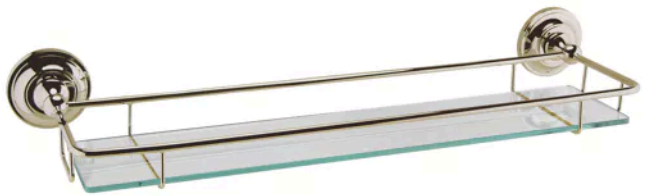

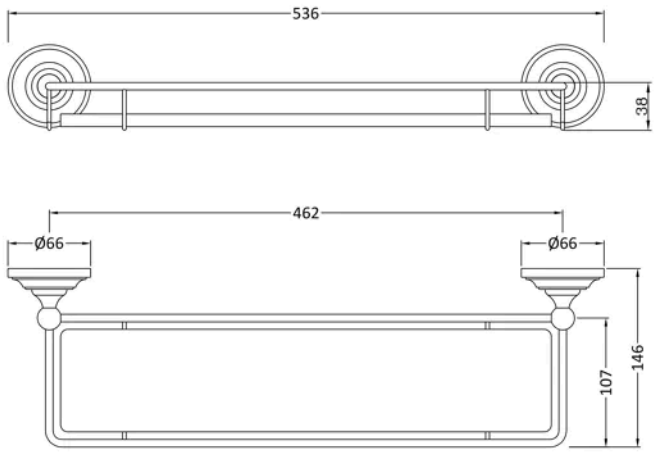

Product Dimensions

Product	66 x 536 x 146mm (H x W x D)
Packaged	68 x 155 x 480mm (H x W x D)
Nett Weight	1 kg
Packaged Weight	1 kg

Product Details

Country of Origin	China
Product Material	Brass
Colour/Finish	Brushed Gold
Style	Traditional

© ROXOR Group