Sales Code: CMA015N **Barcode:** 5056462642314 **Brand:** BC Designs **Description:** BC Sanitan Nickel Ceramic Soap Dish Holder



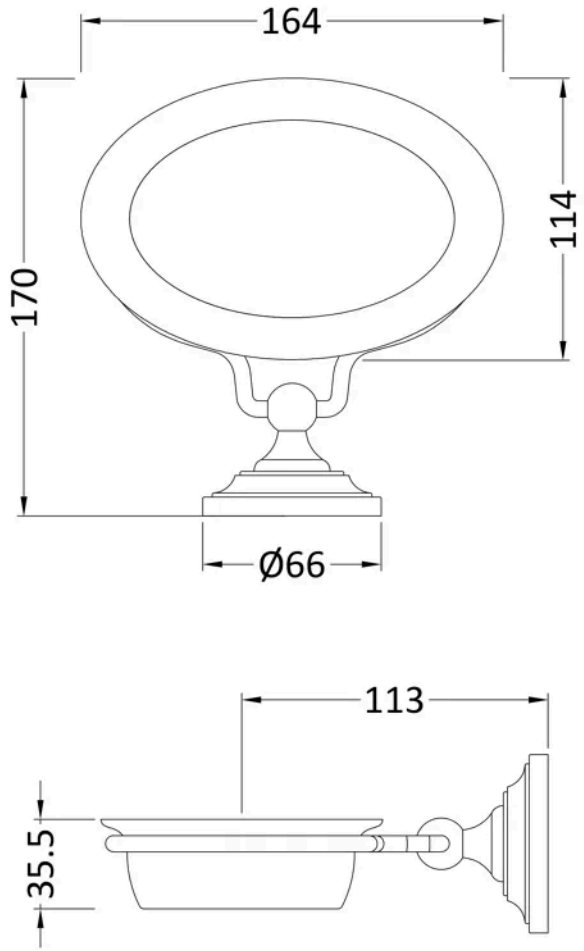

Product Dimensions

Product	66 x 164 x 170mm (H x W x D)
Packaged	100 x 165 x 175mm (H x W x D)
Nett Weight	1 kg
Packaged Weight	1 kg

Product Details

Country of Origin	China
Product Material	Brass Ceramic
Colour/Finish	Nickel
Style	Traditional

© ROXOR Group