Sales Code: CMA015 **Barcode:** 5056462642307 **Brand:** BC Designs **Description:** BC Sanitan Chrome Ceramic Soap Dish Holder



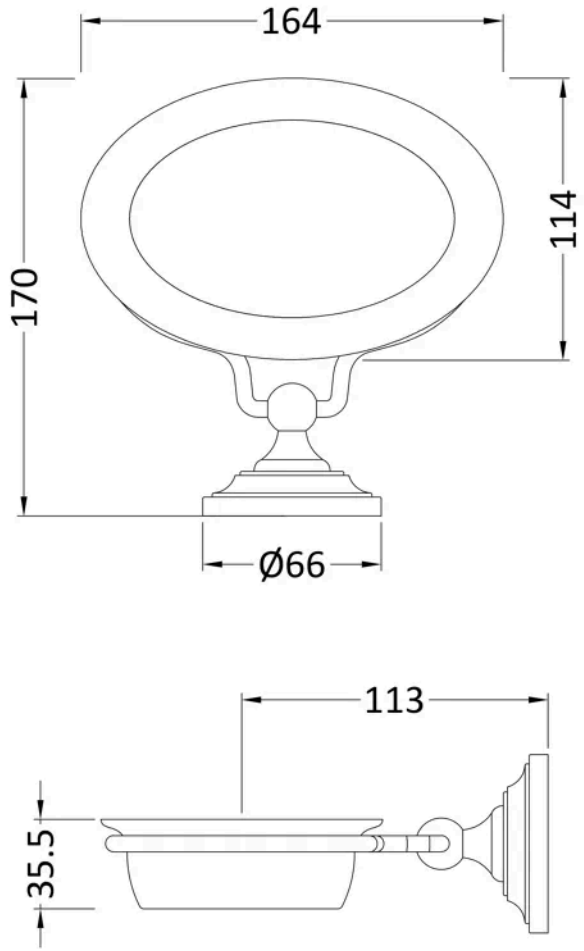

Product Dimensions

Product	66 x 164 x 170mm (H x W x D)
Packaged	100 x 165 x 175mm (H x W x D)
Nett Weight	0.9 kg
Packaged Weight	1 kg

Packaging Details

Label Size (mm)	50 x 100
Label Colour	White
Label Qty	2.0000

Product Details

Country of Origin	China
Product Material	Brass Ceramic
Colour/Finish	Chrome White
Style	Traditional
Fixings Included	Yes

© ROXOR Group