Sales Code: CMA010N **Barcode:** 5056462642239 **Brand:** BC Designs **Description:** BC Sanitan Nickel Classic Rounded Towel Ring



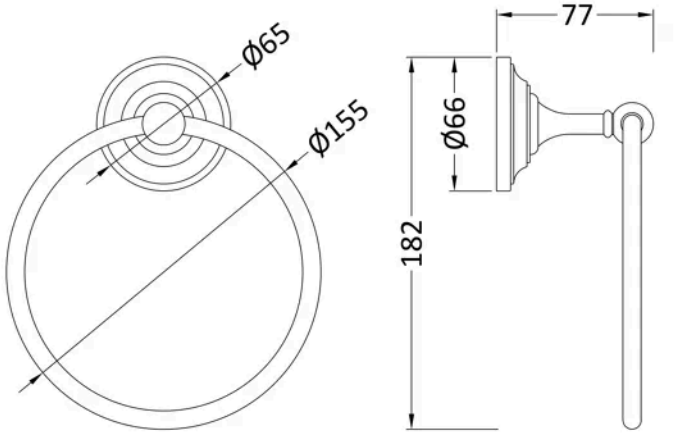

Product Dimensions

Product	155 x 155 x 77mm (H x W x D)
Packaged	60 x 170 x 180mm (H x W x D)
Nett Weight	0.3 kg
Packaged Weight	0.31 kg

Product Details

Country of Origin	China
Product Material	Brass
Colour/Finish	Nickel
Style	Traditional

© ROXOR Group