Sales Code: CMA010 **Barcode:** 5056462642222 **Brand:** BC Designs **Description:** BC Sanitan Chrome Classic Rounded Towel Ring



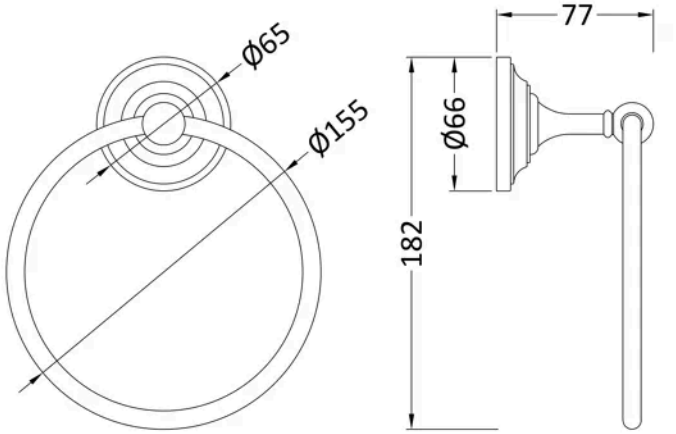

Product Dimensions

Product	155 x 155 x 77mm (H x W x D)
Packaged	60 x 170 x 180mm (H x W x D)
Nett Weight	0.2 kg
Packaged Weight	0.31 kg

Packaging Details

Label Size (mm)	50 x 100
Label Colour	White
Label Qty	2.0000

Product Details

Country of Origin	China
Product Material	Brass
Colour/Finish	Chrome
Style	Traditional
Fixings Included	Yes

© ROXOR Group