Sales Code: CMA005CO **Barcode:** 5056462642208 **Brand:** BC Designs **Description:** BC Designs Victrion Copper Dog Bone Toilet Roll Holder with Back Plate



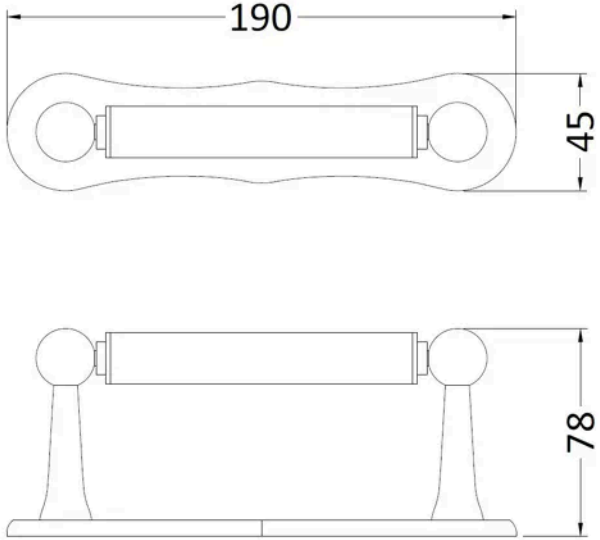

Product Dimensions

Product	45 x 190 x 78mm (H x W x D)
Packaged	75 x 120 x 220mm (H x W x D)
Nett Weight	1 kg
Packaged Weight	1 kg

Product Details

Country of Origin	China
Product Material	Brass
Colour/Finish	Copper
Style	Traditional

© ROXOR Group